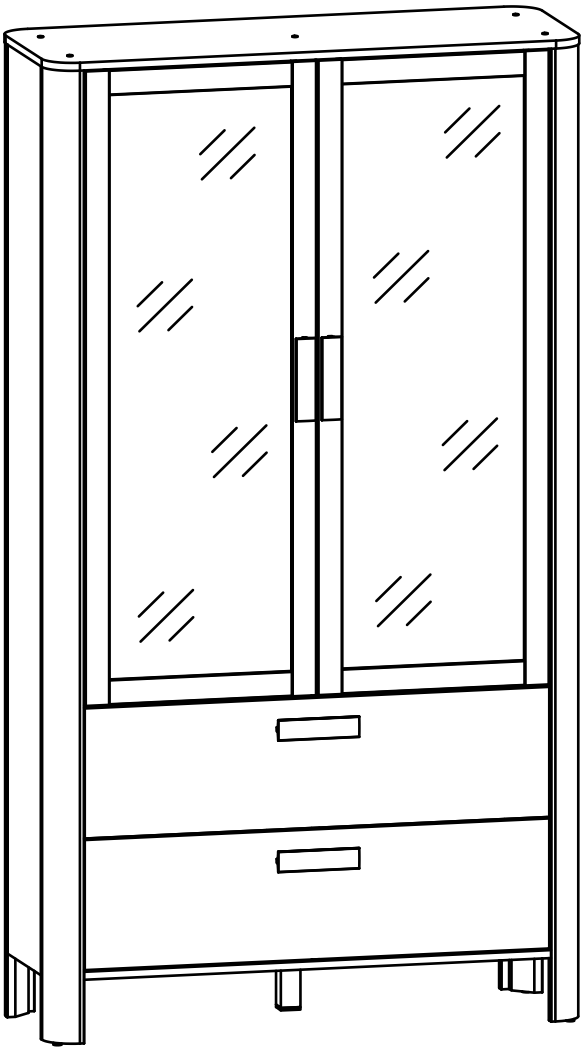

120min


LE TRI
FACILE
BAC DE TRI
FR
Donnez ou recyclez vos meubles.
Association
OU
Magasin
OU
Déchèterie
https://quefairedemesdechets.fr

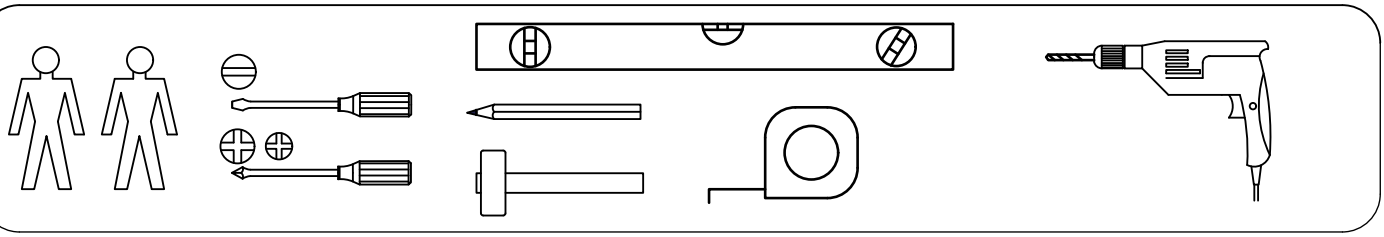

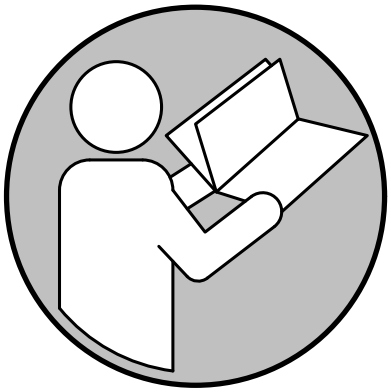

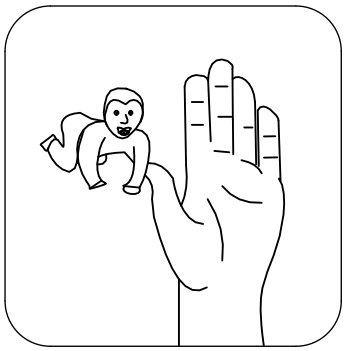

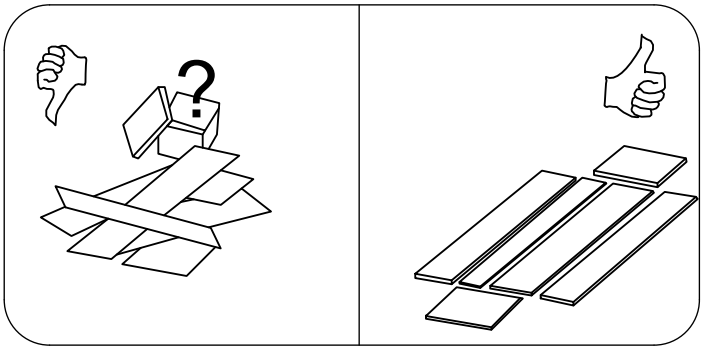

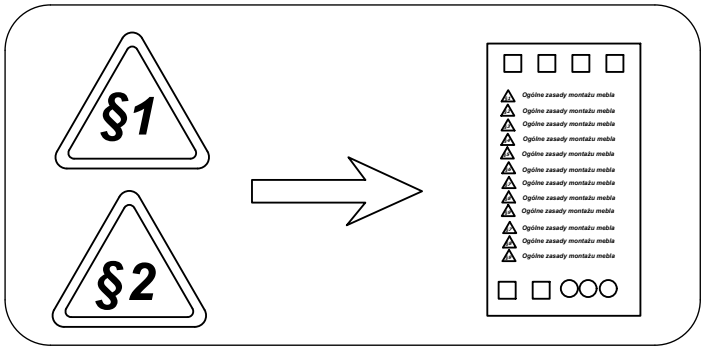
§1
§2
Ogólne zasady montażu mebla

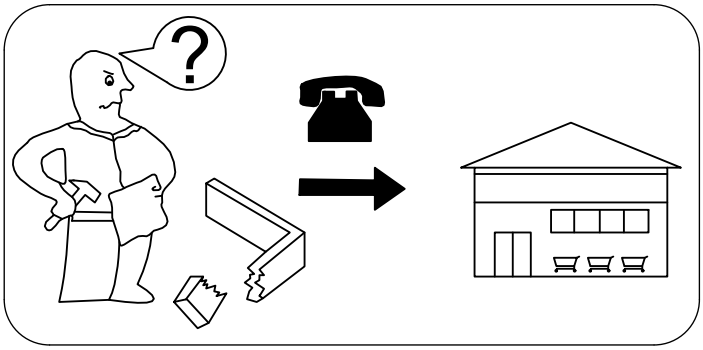

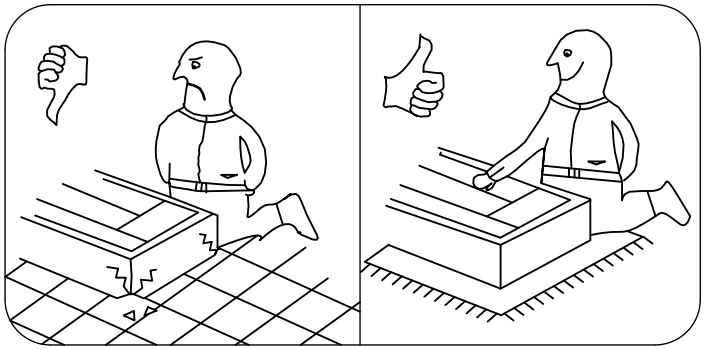

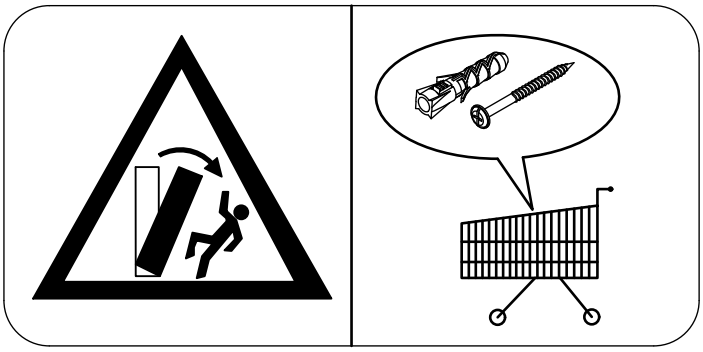

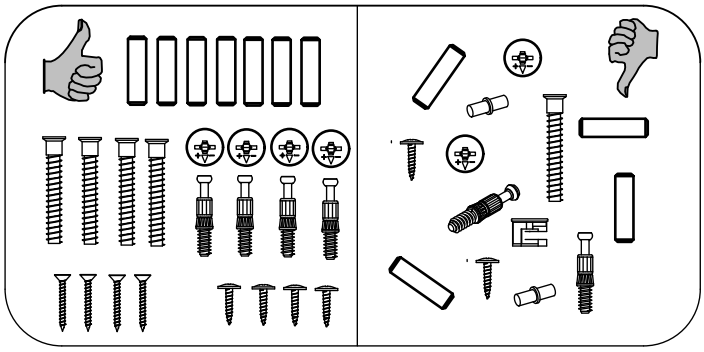

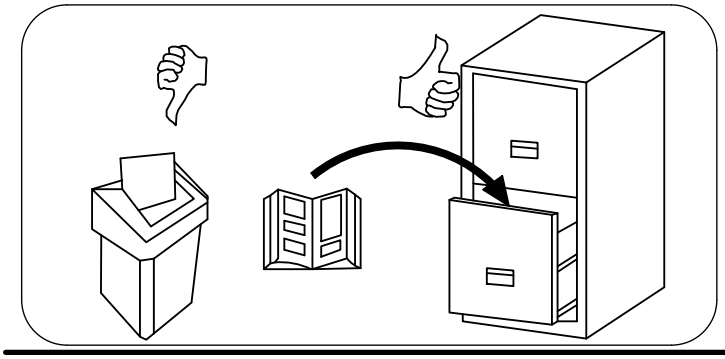

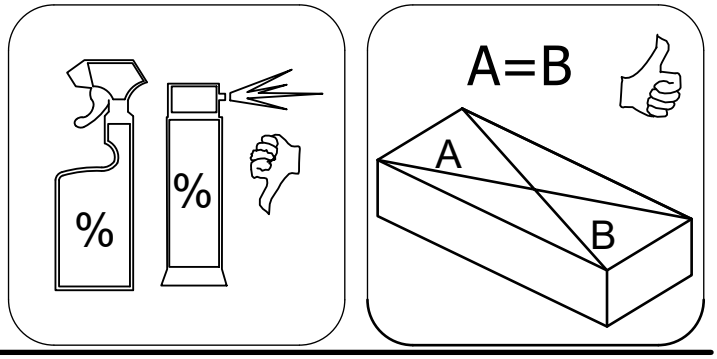
A=B
A
B

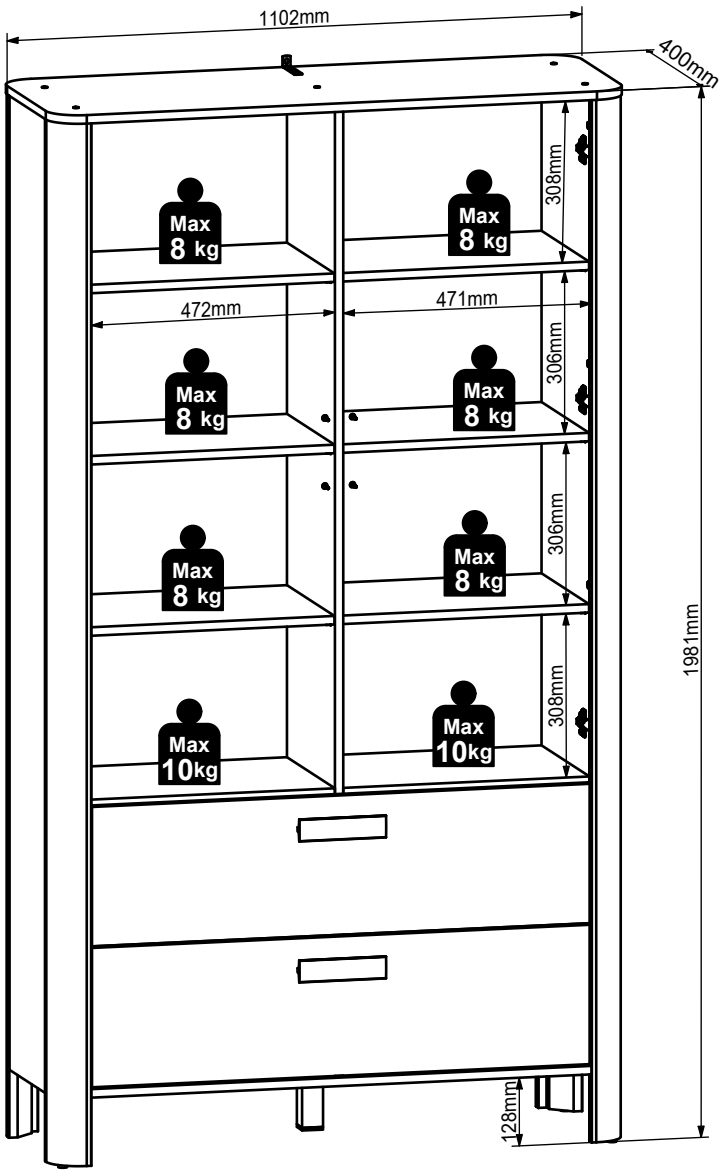
1102mm
400mm
1981mm
308mm
306mm
306mm
308mm
128mm
472mm
471mm
Max 8 kg
Max 8 kg
Max 8 kg
Max 8 kg
Max 8 kg
Max 10kg
Max 10kg

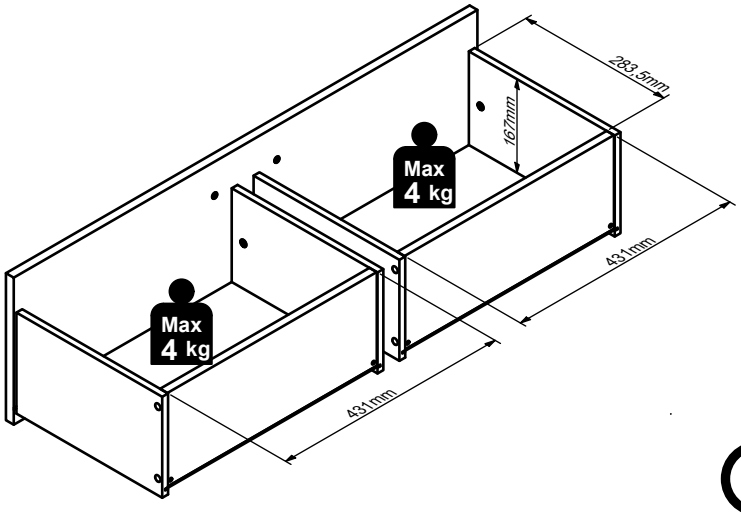
283.5mm
167mm
431mm
431mm
Max 4 kg
Max 4 kg

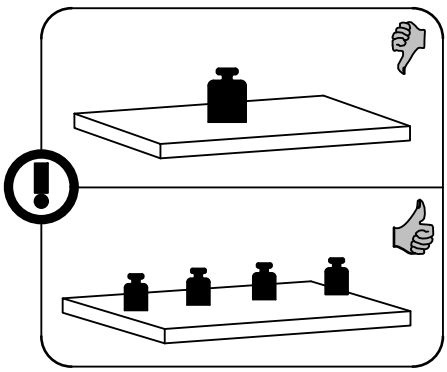

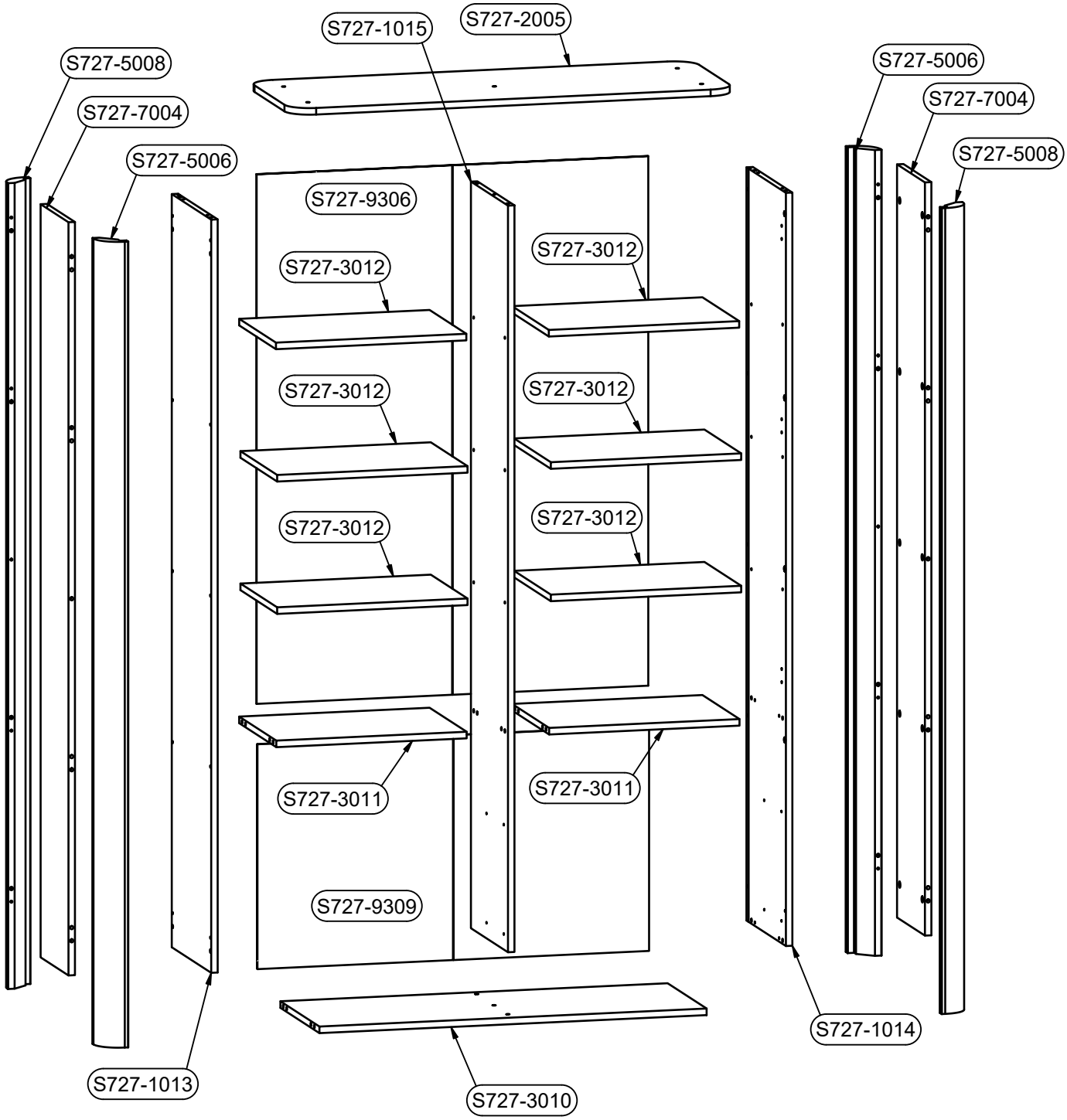
S727-1015
S727-2005
S727-5008
S727-7004
S727-5006
S727-9306
S727-3012
S727-3012
S727-3012
S727-3012
S727-3012
S727-3012
S727-3011
S727-3011
S727-9309
S727-1013
S727-3010
S727-5006
S727-7004
S727-5008
S727-1014

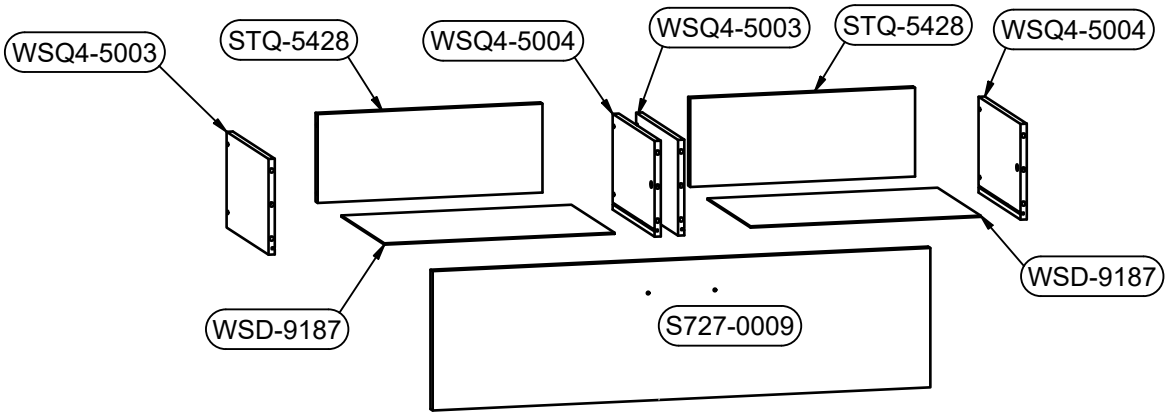
WSQ4-5003
STQ-5428
WSQ4-5004
WSQ4-5003
STQ-5428
WSQ4-5004
WSD-9187
WSD-9187
S727-0009

B1	B2	C1	C2	C3	C4	D
S727-0009	-.2	954	262	16	2	1/5
S727-0010	-.1	1278	475	16	2	4/5
S727-1013	-.5	1832	365	16	1	3/5
S727-1014	-.6	1832	365	16	1	3/5
S727-1015	-.2	1816	343	16	1	2/5
S727-2005	-.2	1102	401	16	1	4/5
S727-3010	-.2	960	361	16	1	1/5
S727-3011	-.3	472	343	16	2	1/5
S727-3012	-.2	472	340	16	6	5/5
S727-5006	-.3	1960	99	36	2	2/5
S727-5008	-.3	1960	99	36	2	2/5
S727-7004	-.1	1832	258	16	2	3/5
S727-9306	-.3	1288	971	2,5	1	4/5
S727-9309	-.3	547	971	2,5	1	4/5
STQ-5428	-	431	167	15	4	5/5
WSD-9187	-	441	308	2,5	4	4/5
WSQ4-5003	A.3	300	180	12	4	1/5
WSQ4-5004	A.3	300	180	12	4	1/5

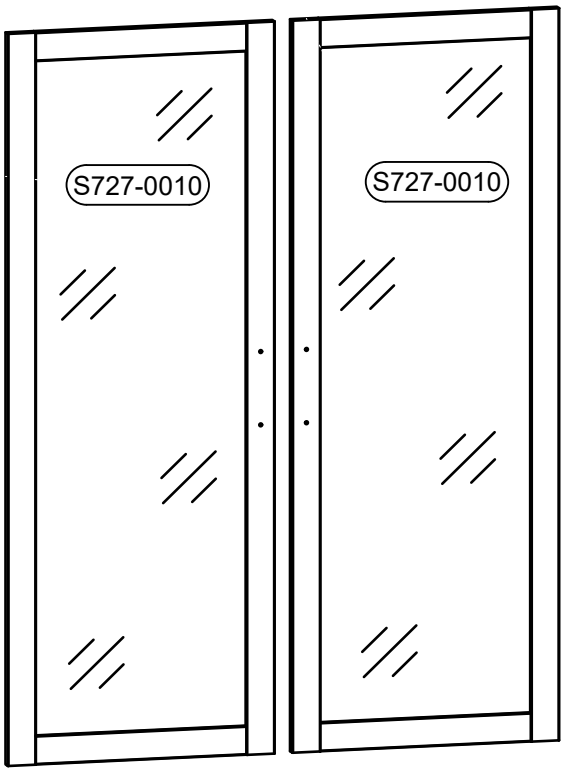

1:1

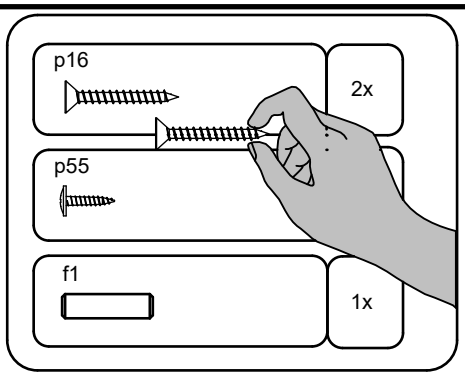

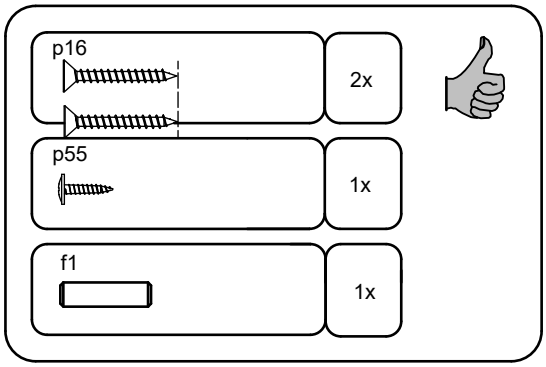

e1	50mm	6x
e3	6x13mm	16x
f1	30mm	56x
f6	Ø8x50 mm	2x
f25	6.5x40 mm	16x
p51	3.5x15mm	18x
p55	2.9x16mm	46x
p64	Ø4x40 mm	20x
p87	Ø4x25 mm	8x
r1	15 mm, 12 mm, 15x12mm	32x
r15	12 mm, 10.5 mm, 12x10,5mm	8x
r10		2x
r42		36x

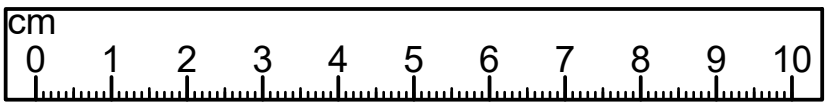

~~1:1~~

a203 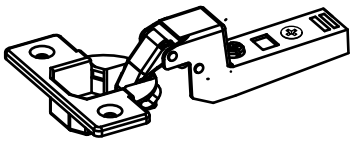	4x	a210 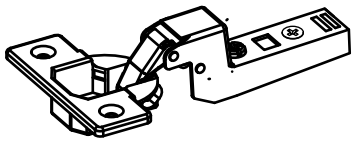	2x
b90 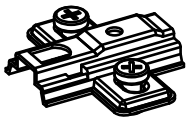	6x	d1 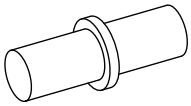 fi5mm	24x
c666 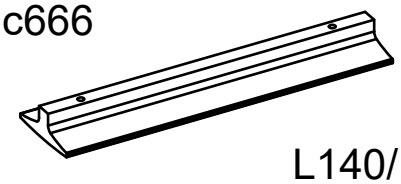 L140/128mm	4x	k1 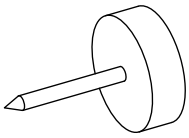	4x
k148\1 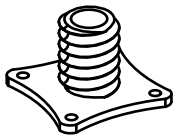	1x	k148\6 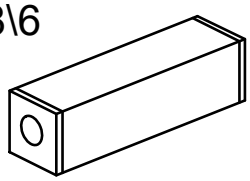	1x
l2 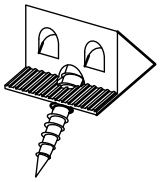	11x	n14\2 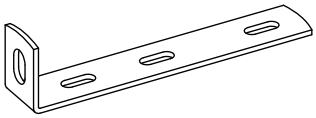	1x
n108 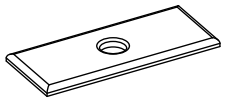	6x	w125\L 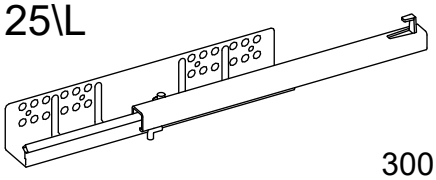 300mm	4x
w125\P 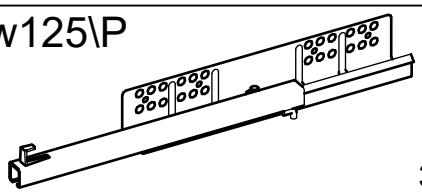 300mm	4x	s59 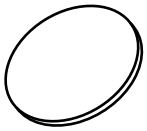 Ø14mm	8x
z1 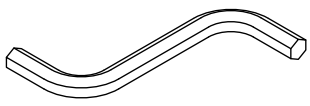 4mm	1x		

f1	r1	r42	k1
30mm	15x12mm		
20x	20x	10x	2x

1 §2

2x

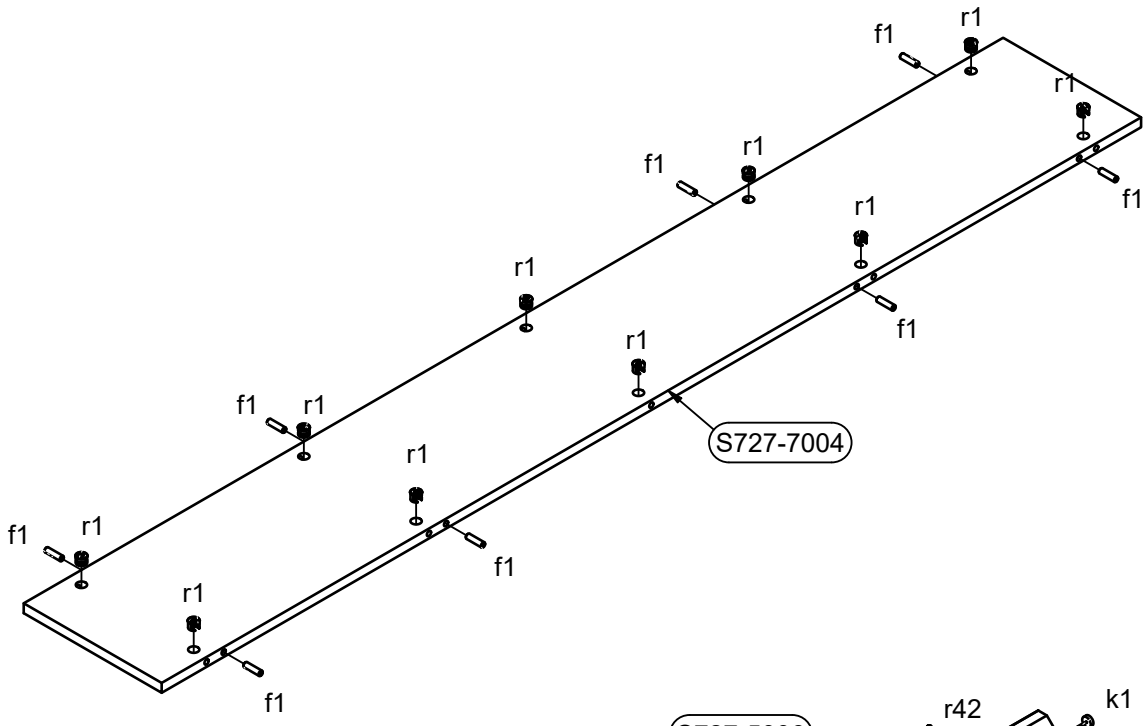

2

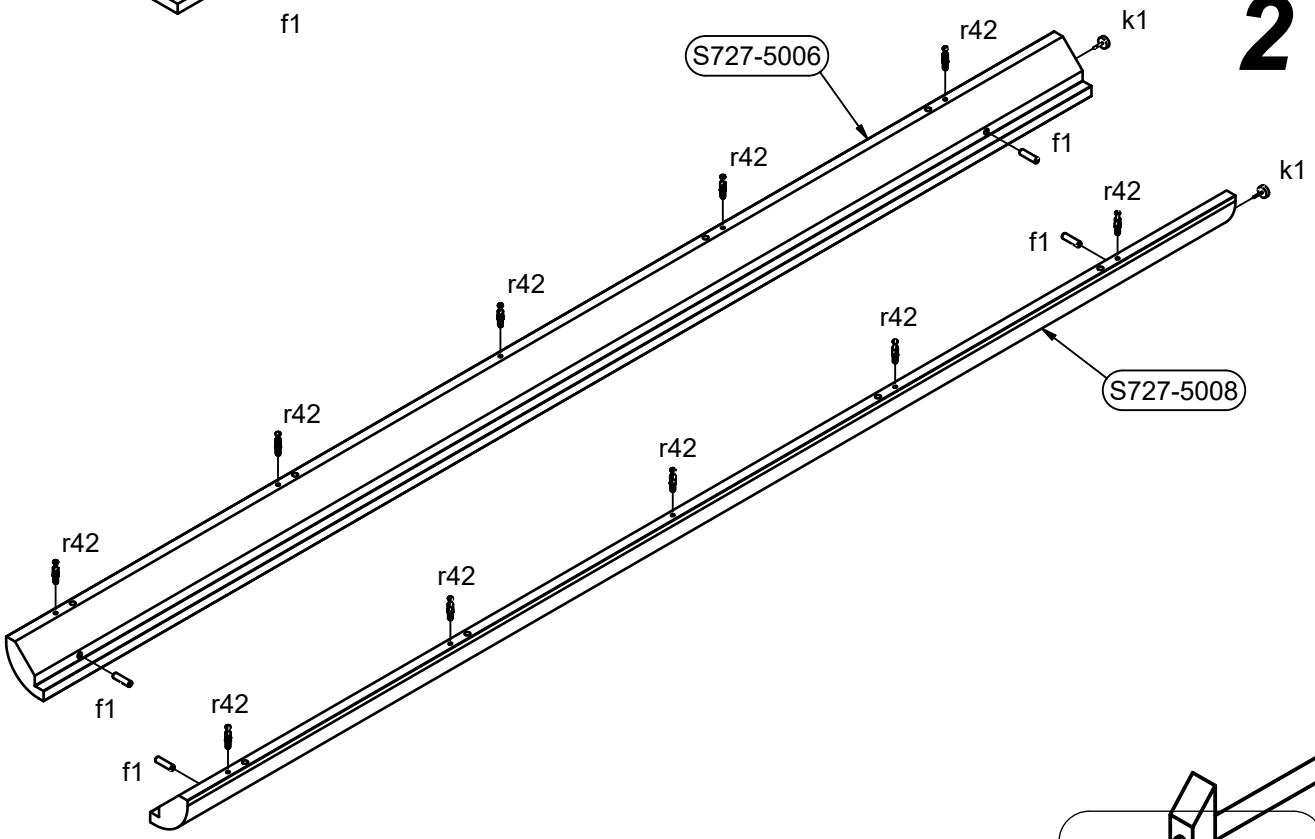

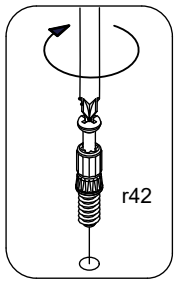

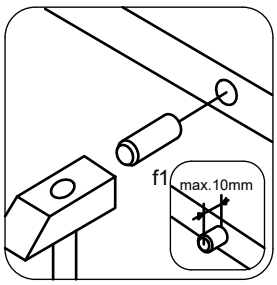

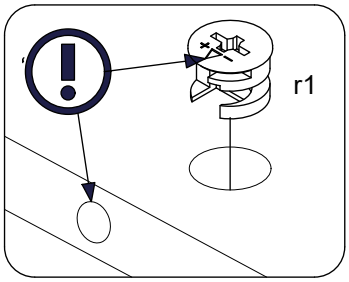

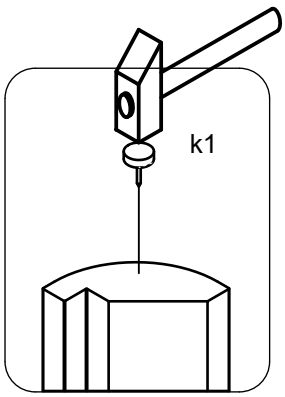

w125\L	2x	f1	2x	r42	4x	e3	4x
300mm		30mm				6x13mm	

3

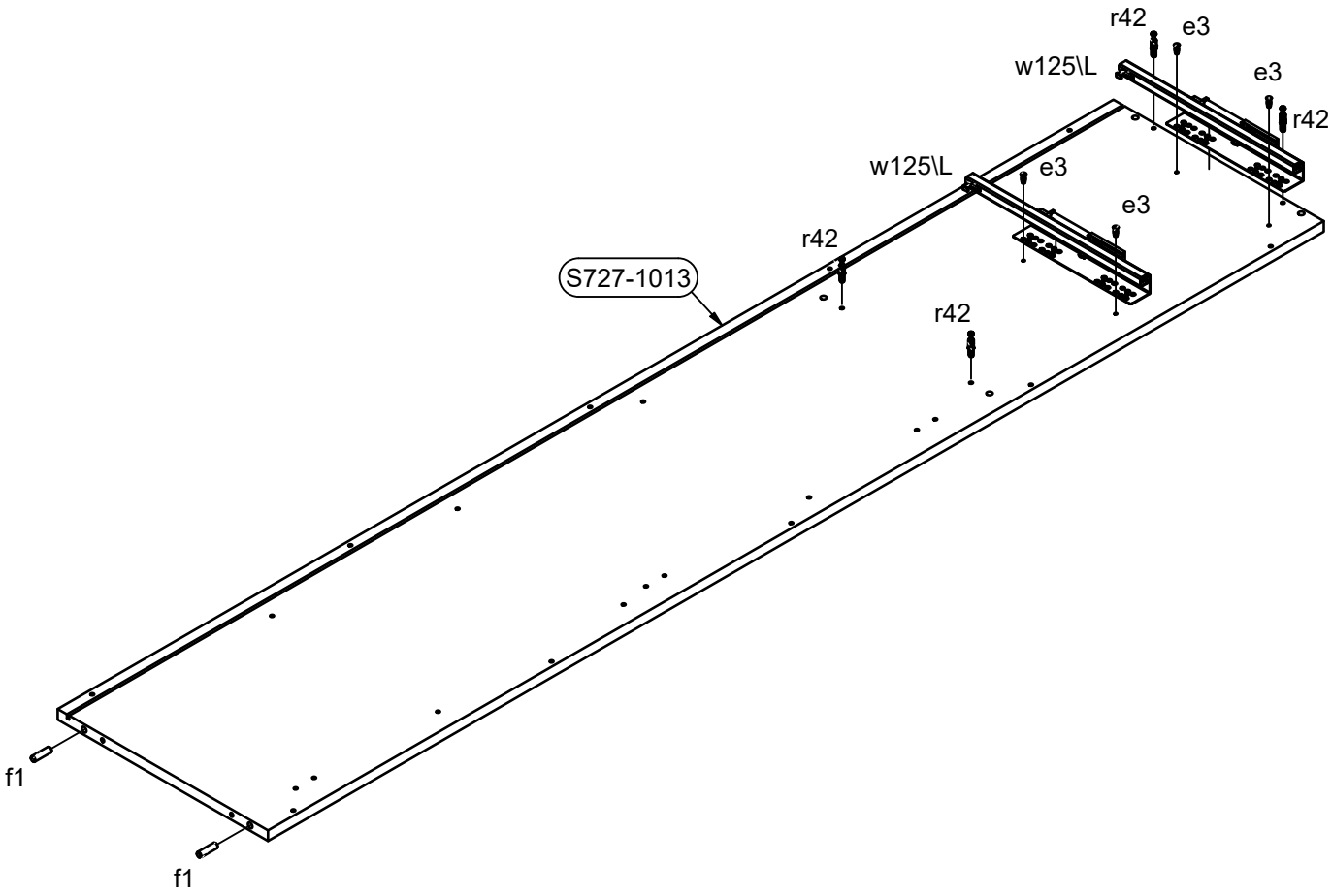

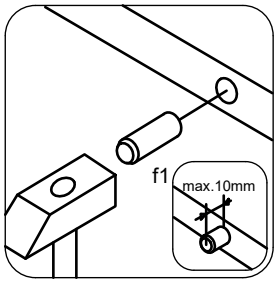

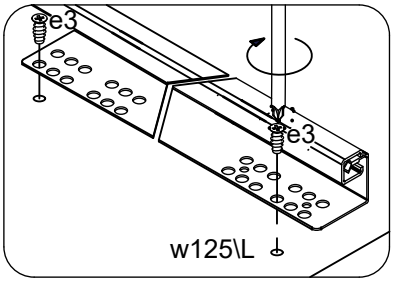

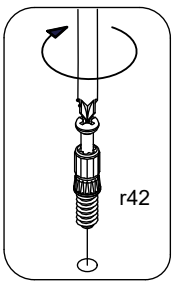

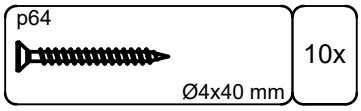
p64
Ø4x40 mm
10x

4

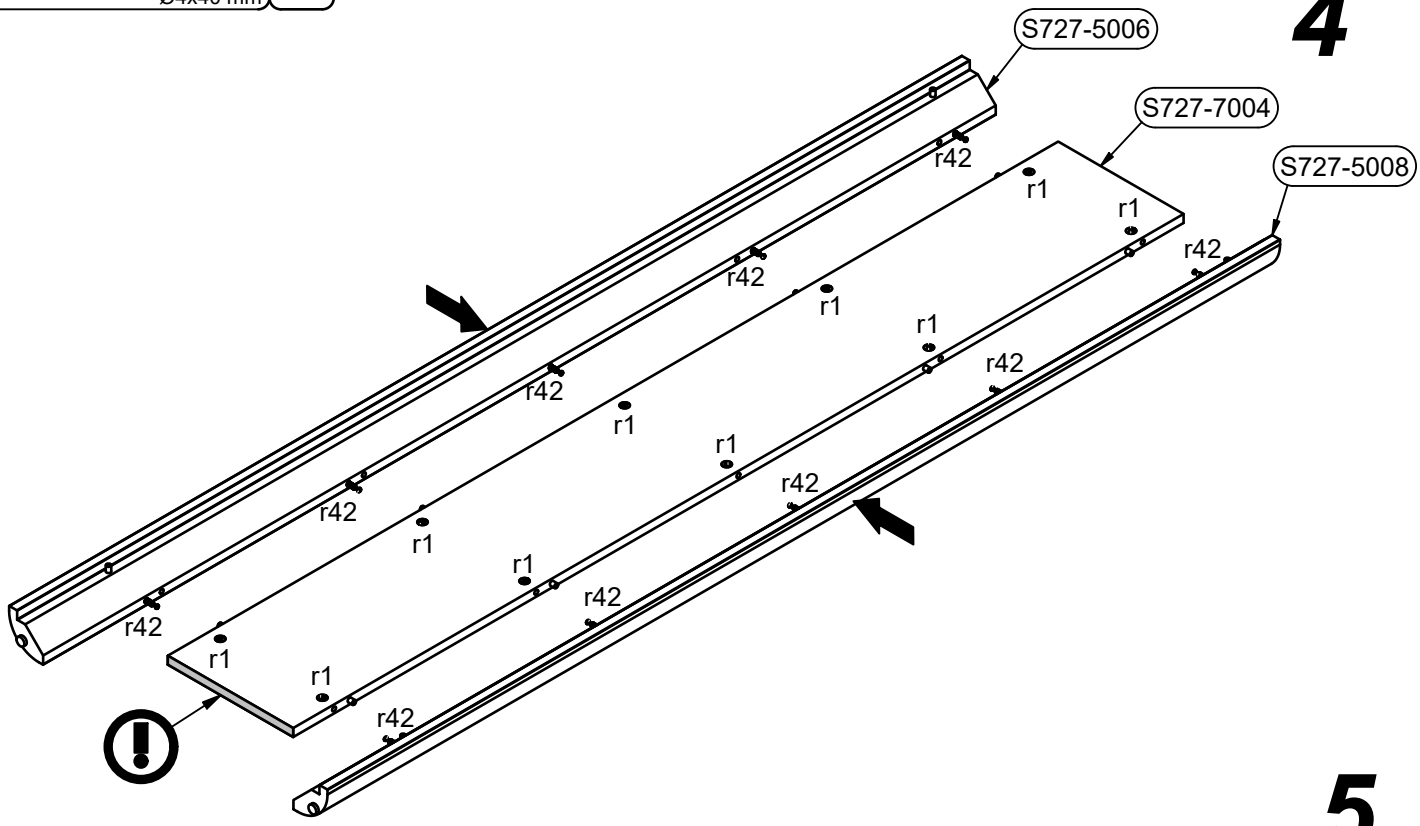
S727-5006
S727-7004
S727-5008
r42
r1

5

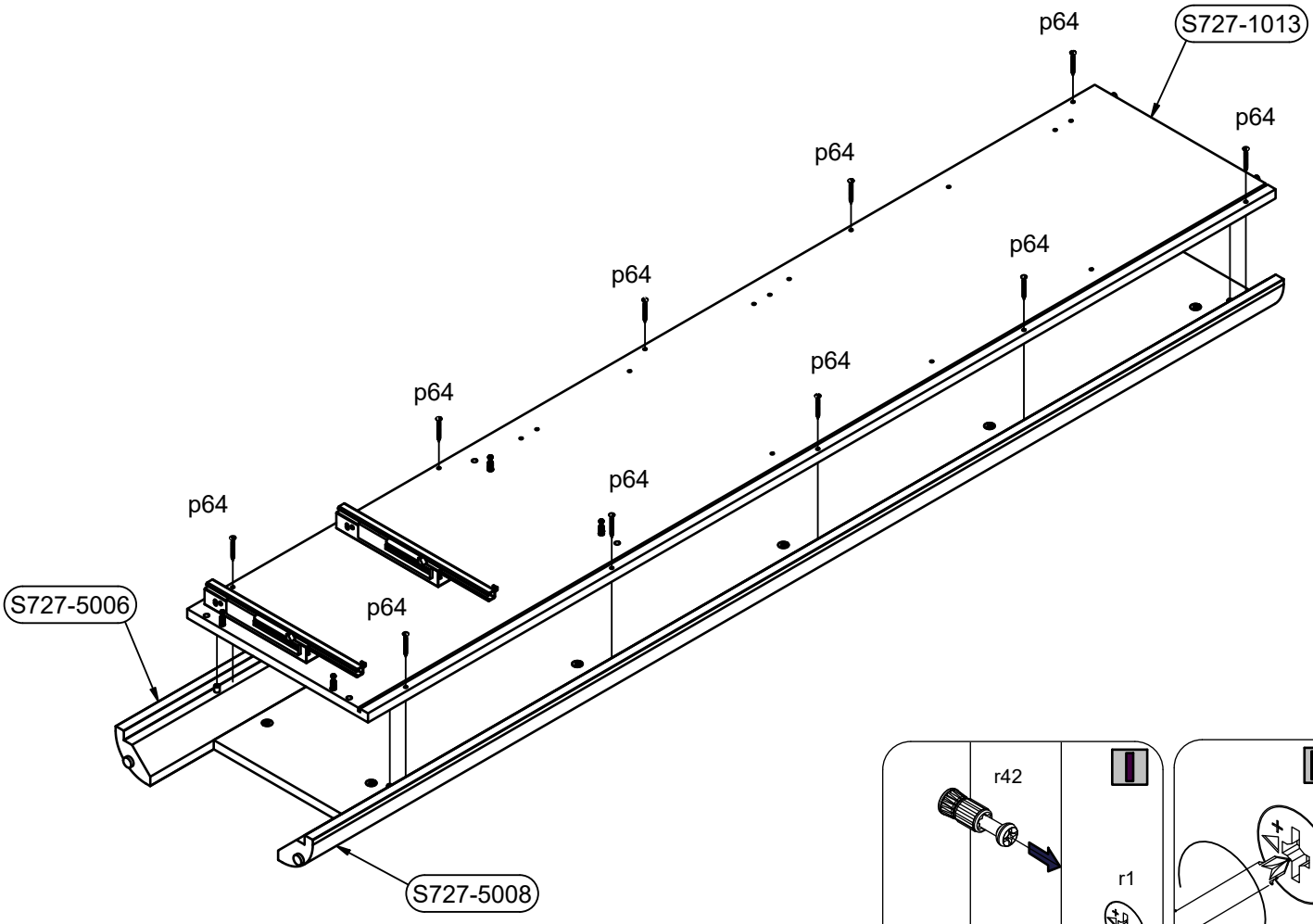
p64
S727-1013
S727-5006
S727-5008

r42
r1
r1

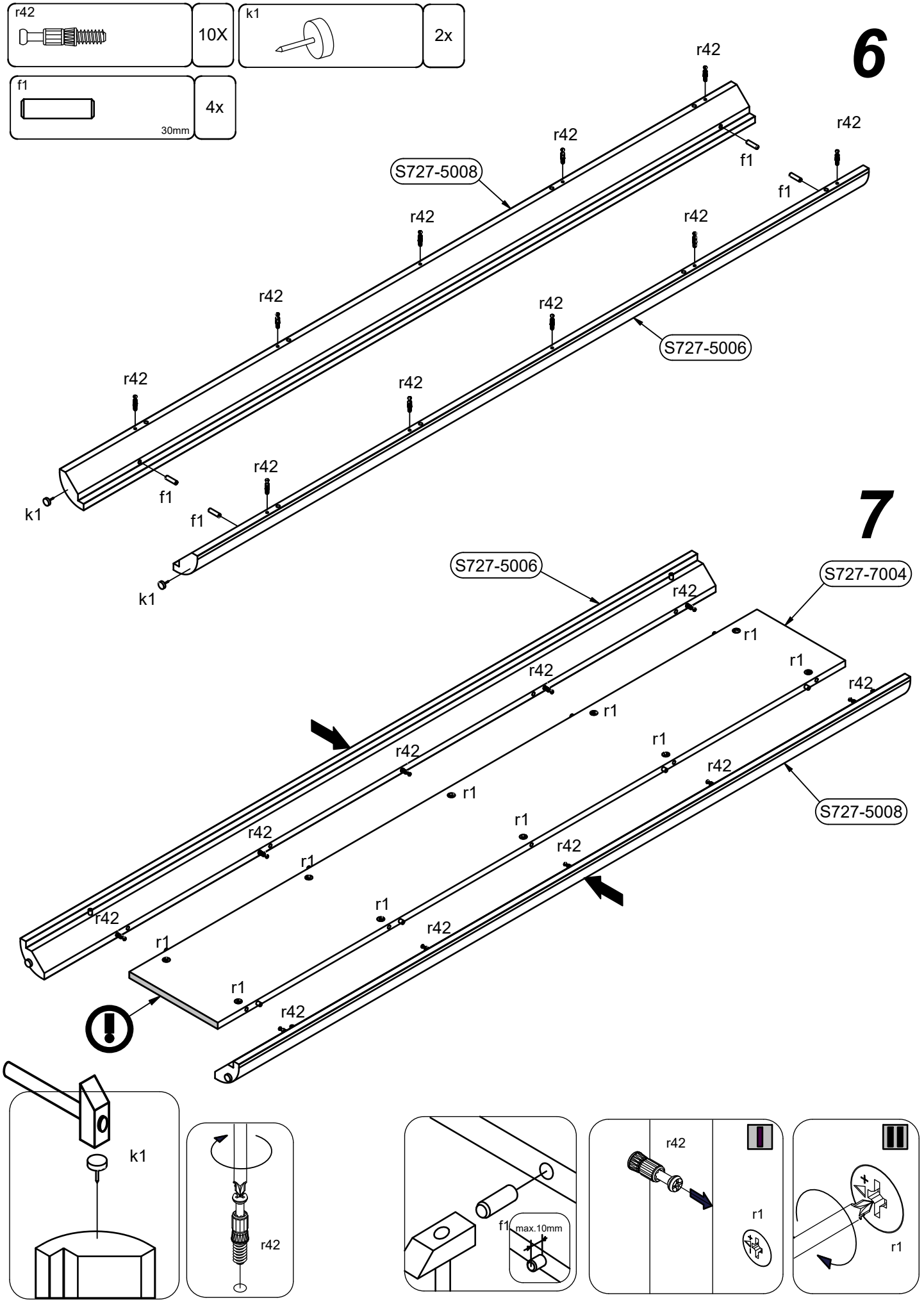
r42
10X
k1
2x
f1
30mm
4x
6
S727-5008
S727-5006
7
S727-7004
max.10mm

w125\P		f1		r42		e3	
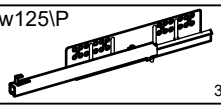 300mm	2x	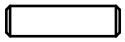 30mm	2x	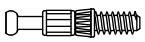	4x	 6x13mm	4x

8

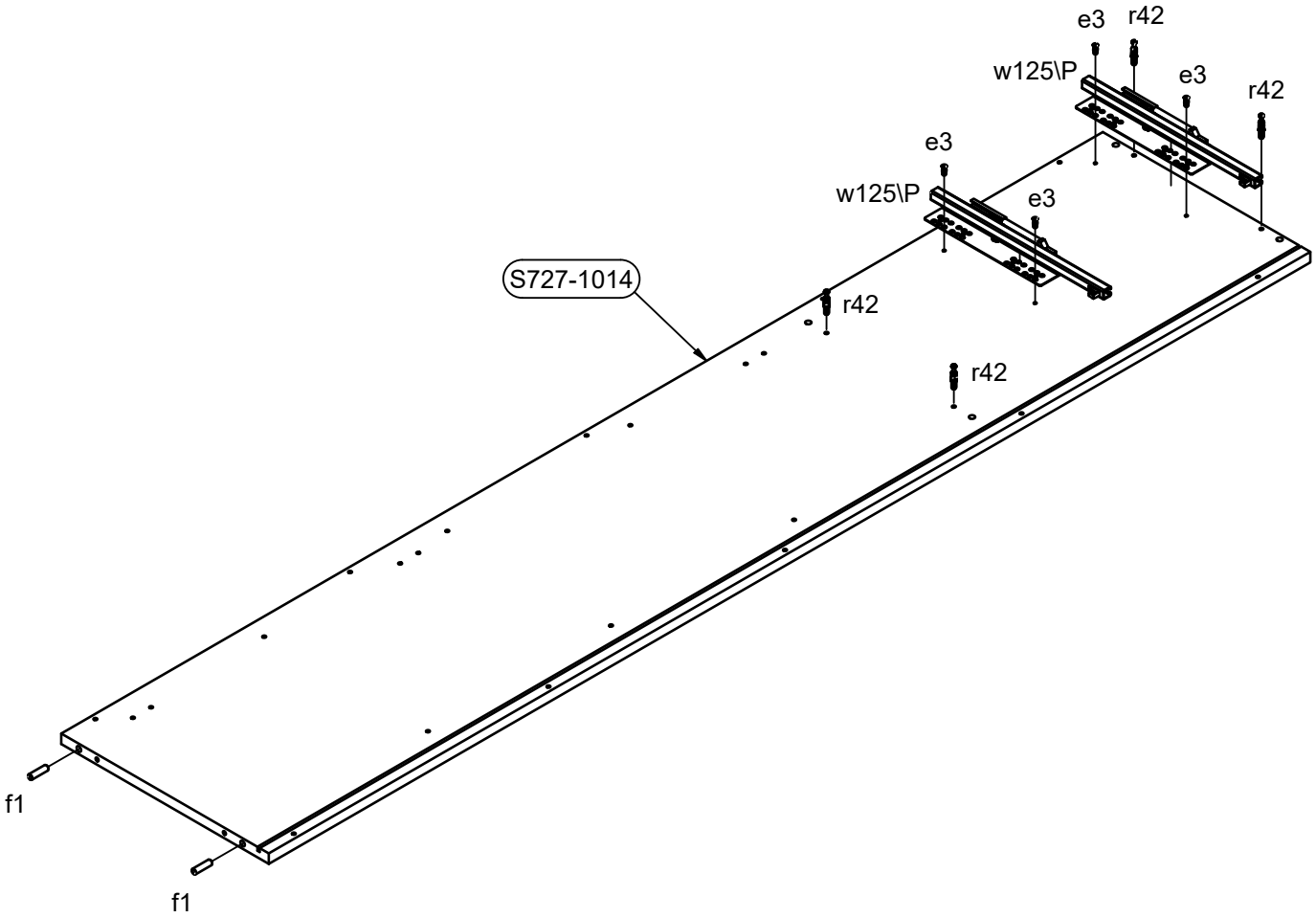

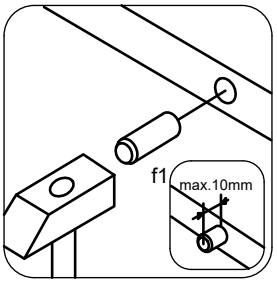

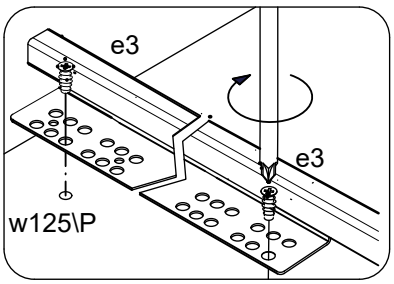

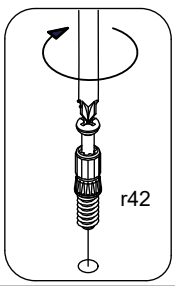

p64	10x	k148\1	1x	p51	4x	f1	4x
Ø4x40 mm				3.5x15mm		30mm	

r1	4x
15mm 12mm 15x12mm	

11

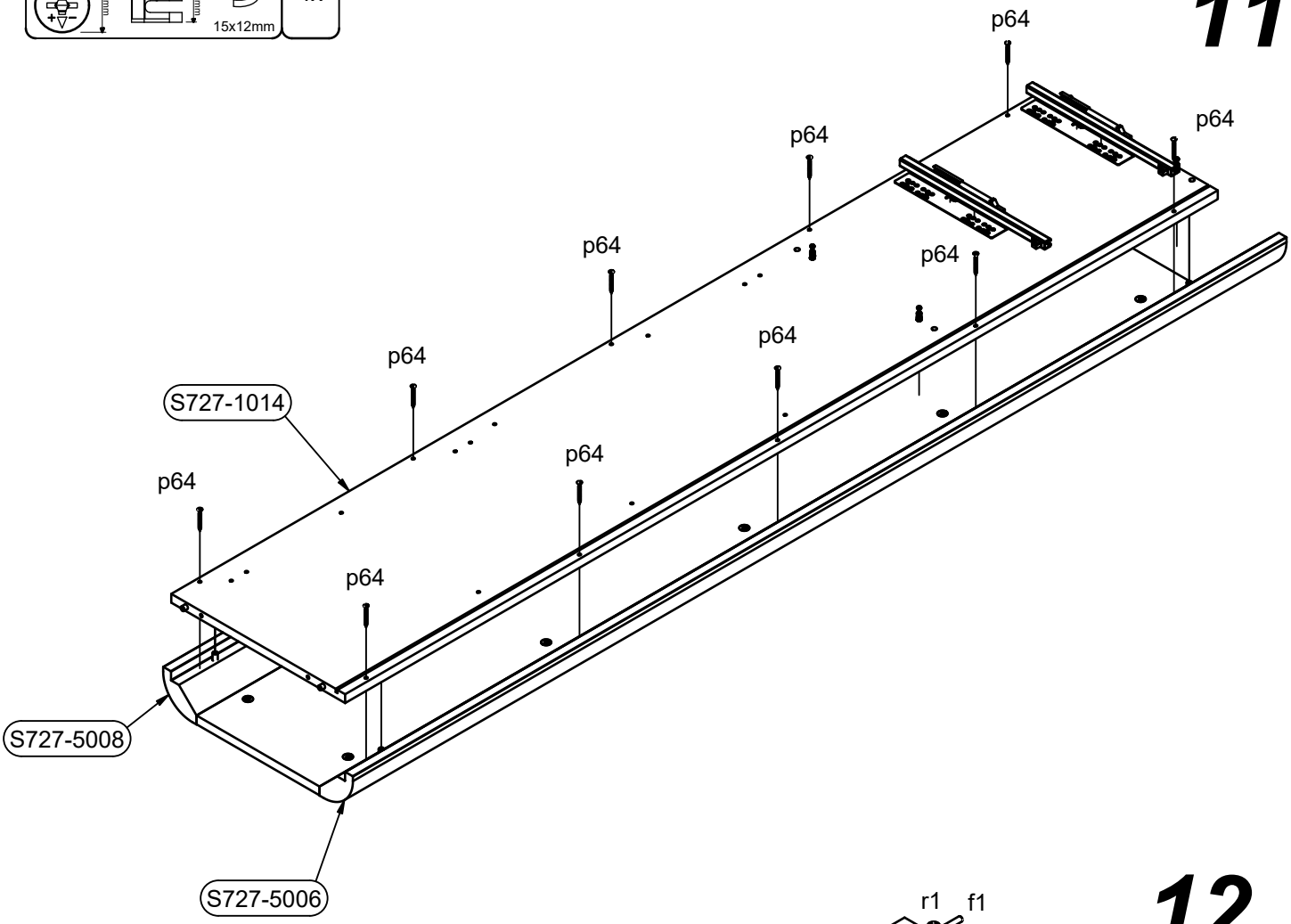

12

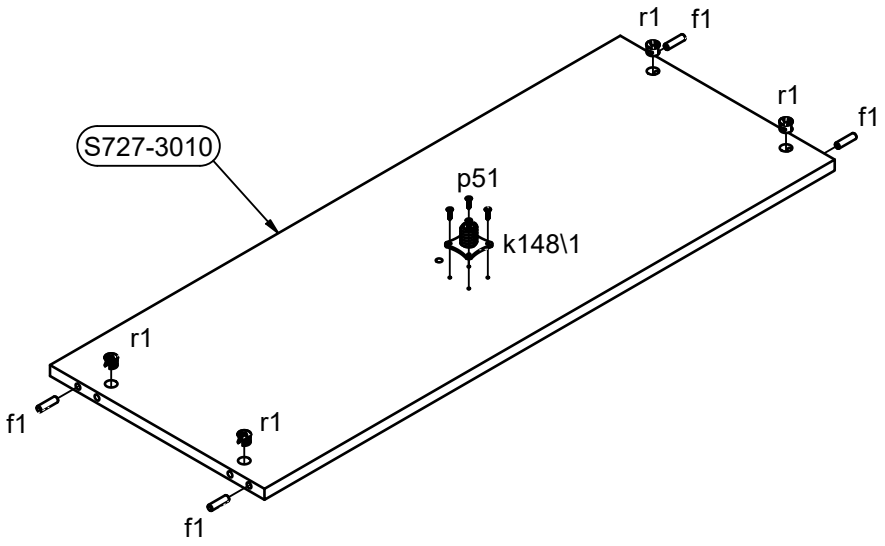

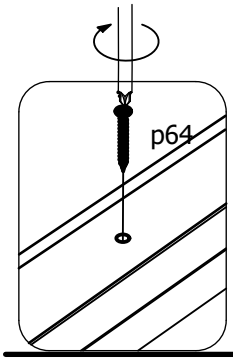

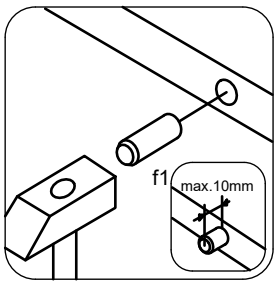

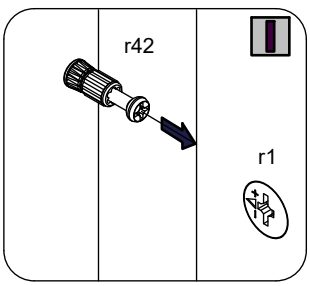

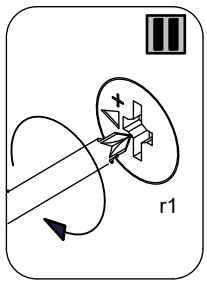

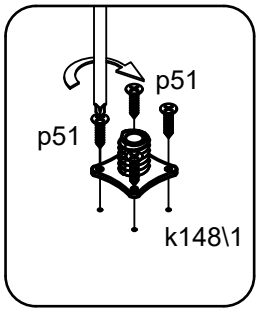

f1	e3	w125\L	w125\P
30mm	6x13mm	300mm	300mm
4x	8x	2x	2x

13

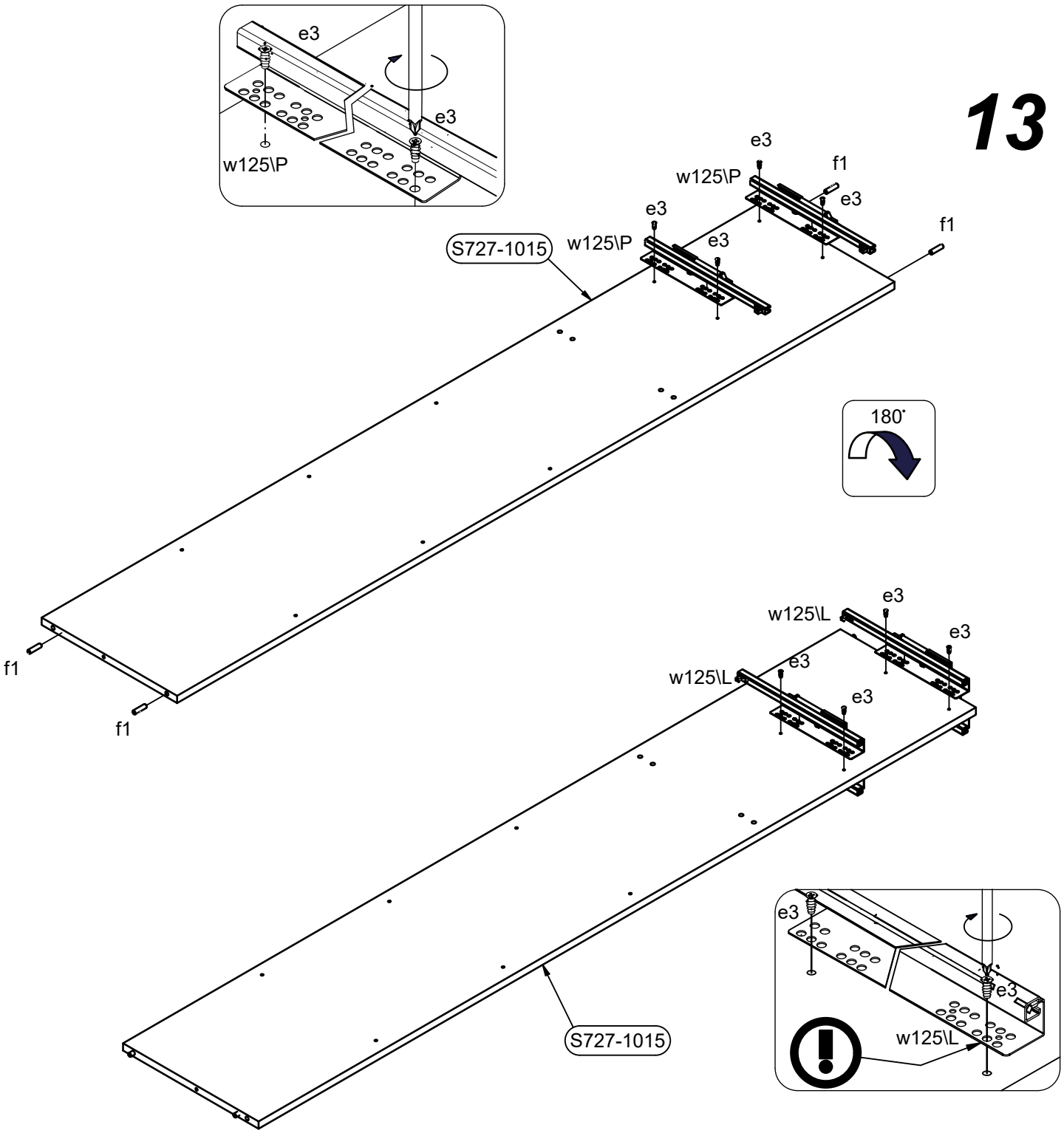

f6		r1		f1		r10	
Ø8x50 mm	2x	15x12mm	8x	30mm	4x		2x

14

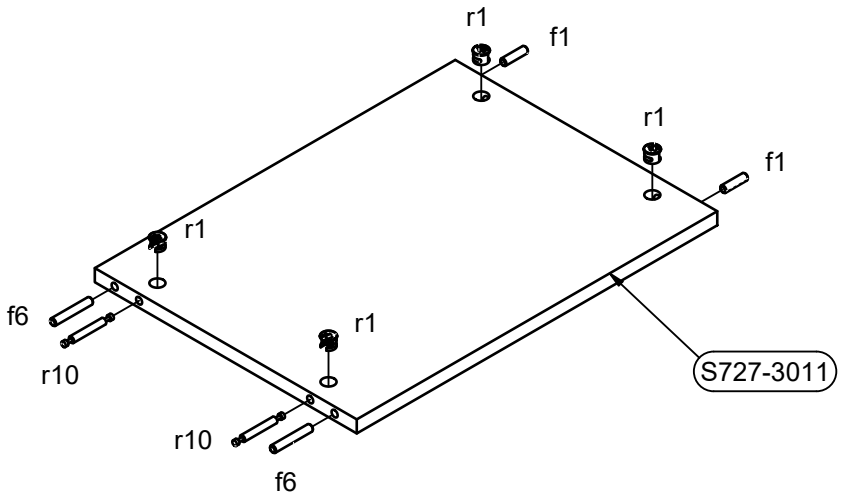

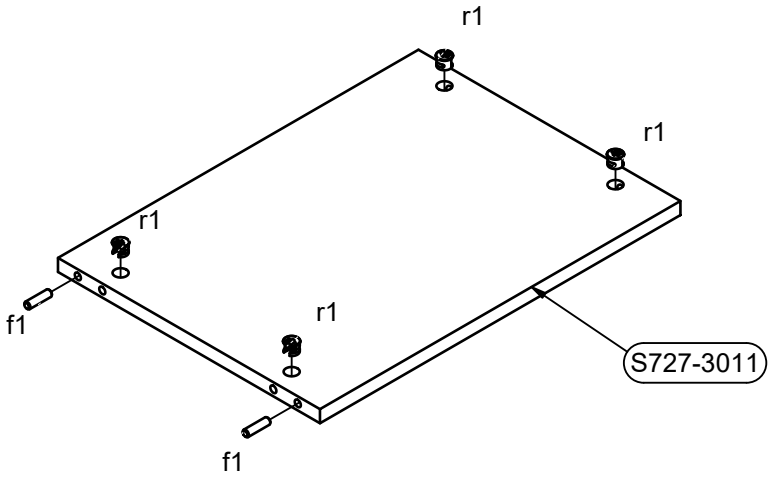

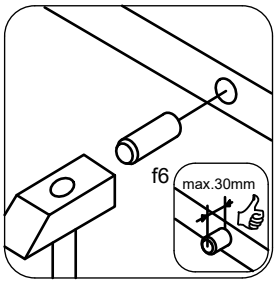

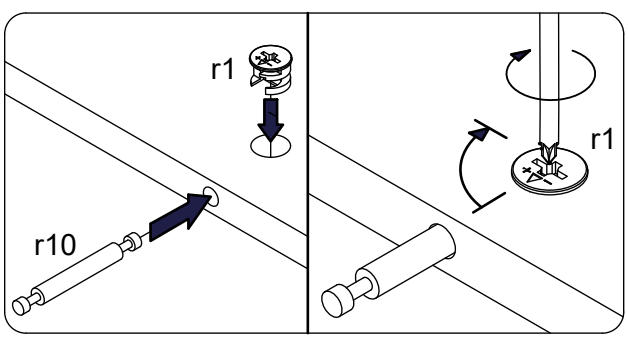

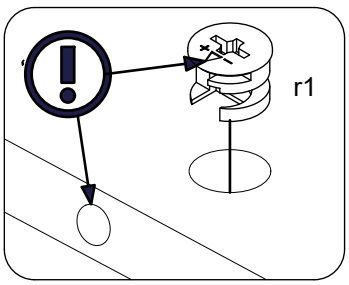

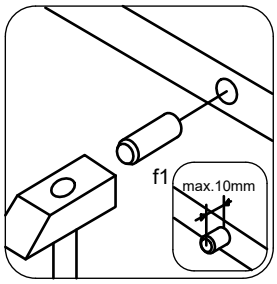

a203	4x	a210	2x	p51 3.5x15mm	12x

15

§11

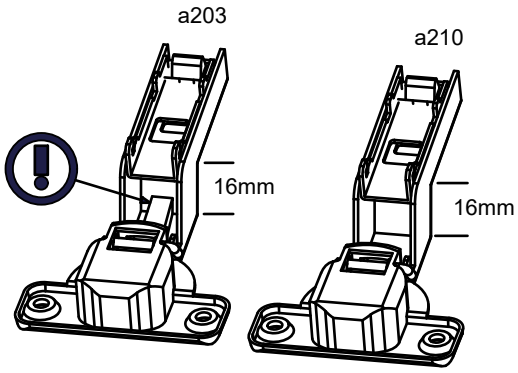

2x

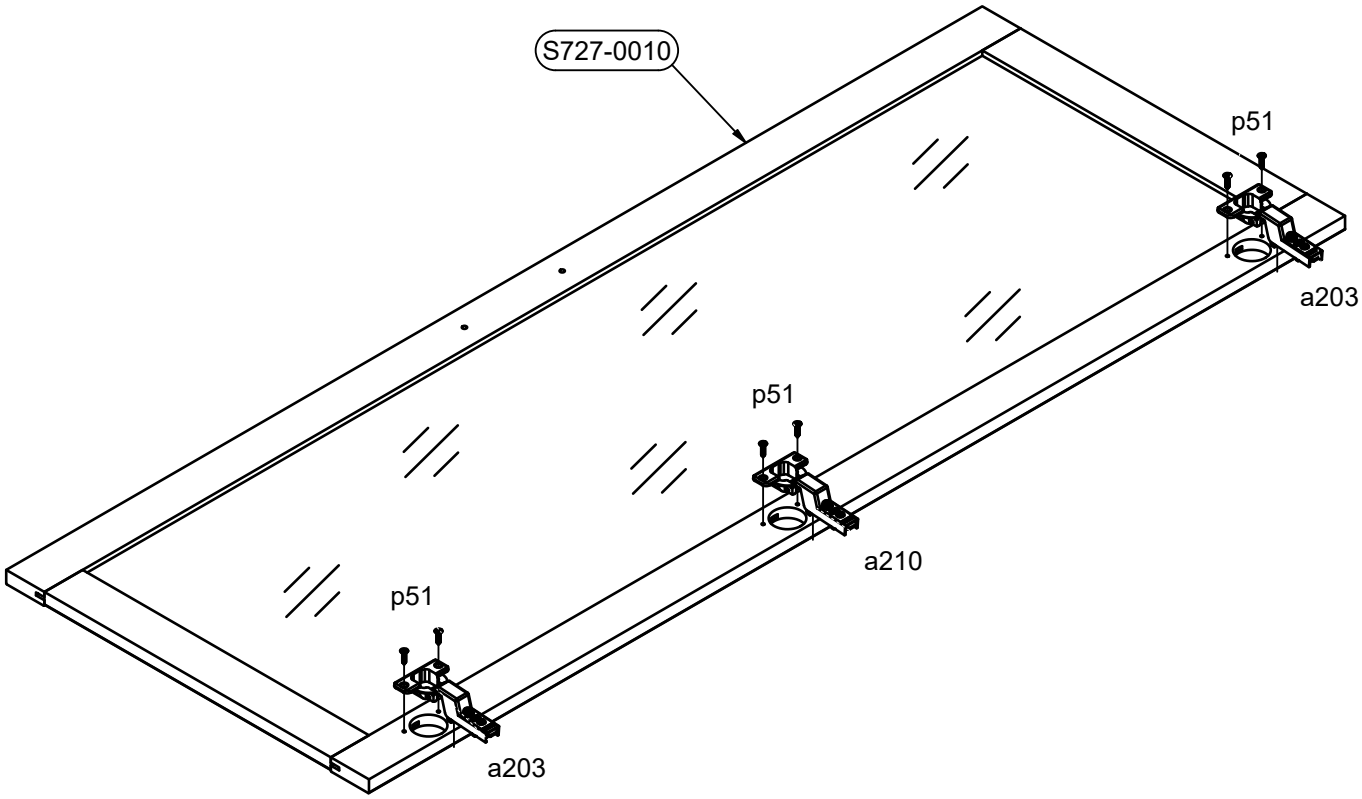

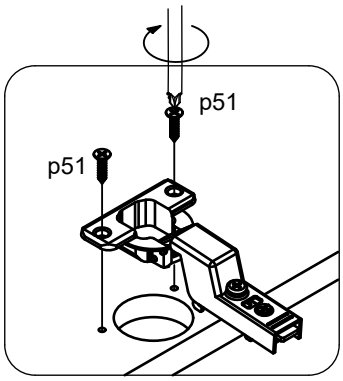

16

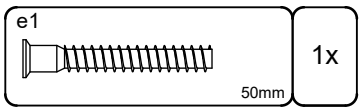
e1
50mm
1x

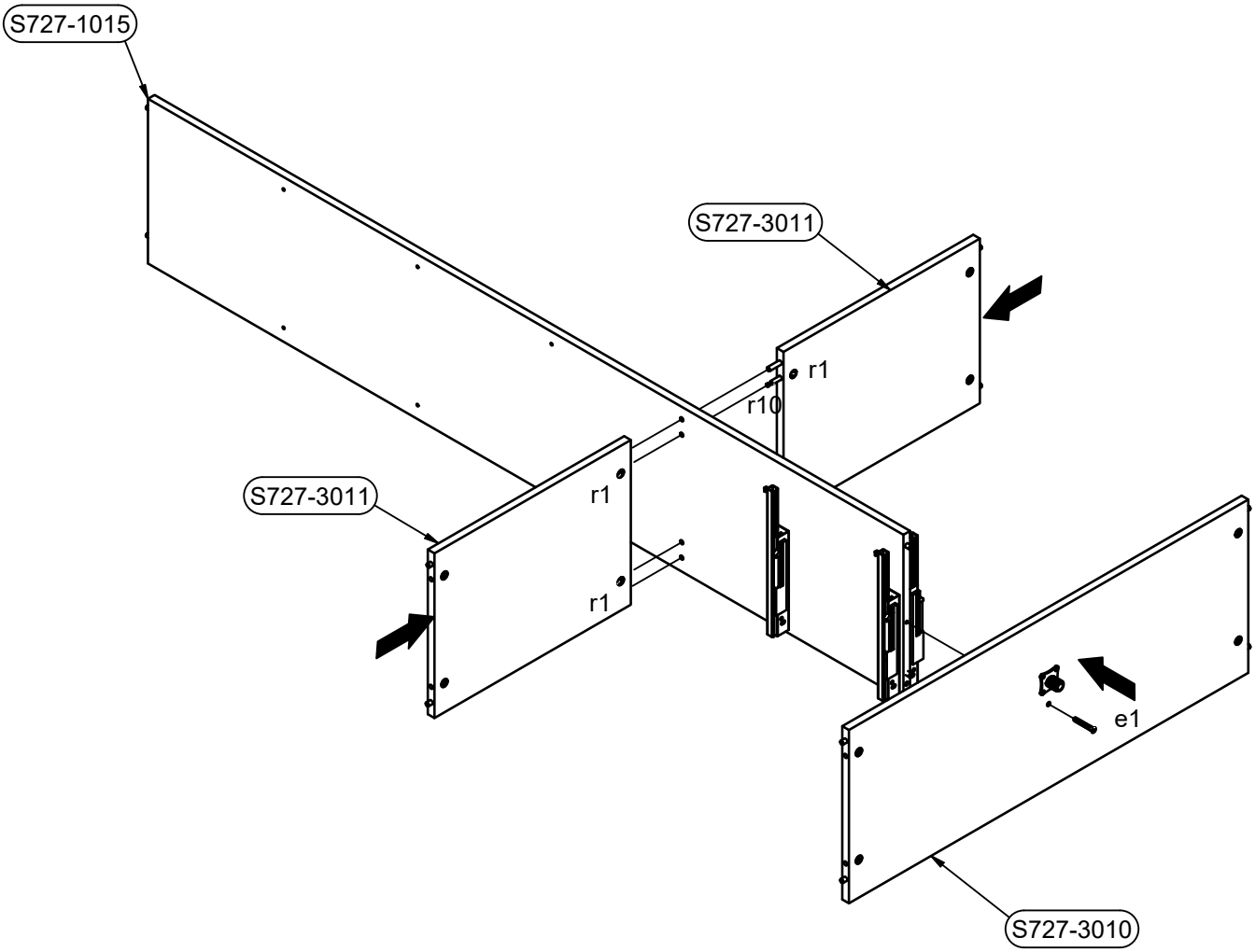
S727-1015
S727-3011
r1
r10
S727-3011
r1
r1
e1
S727-3010

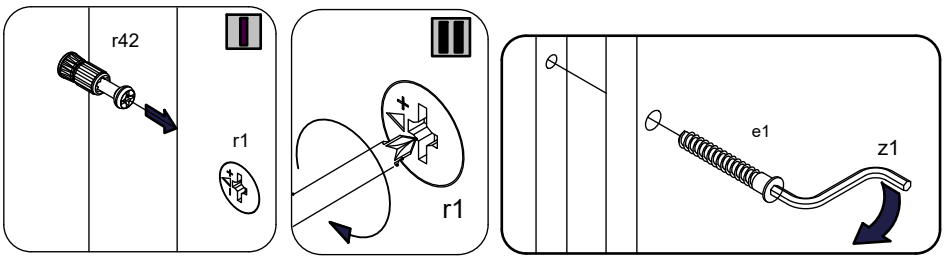
r42
r1
r1
e1
z1

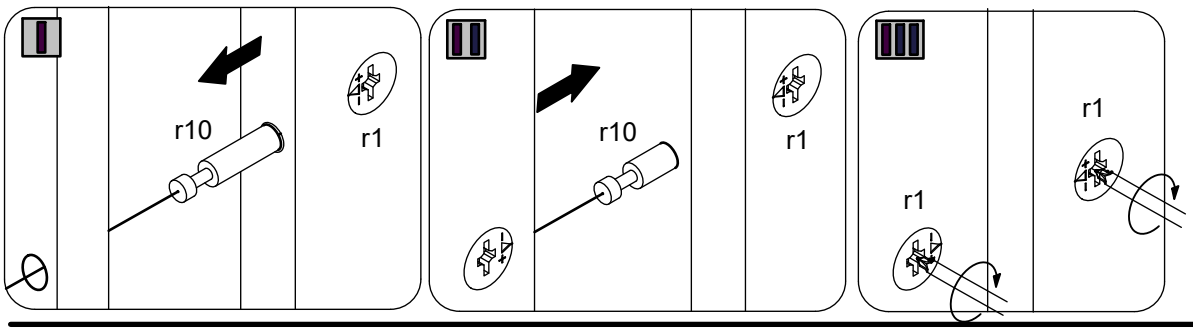
r10
r1
r10
r1
r1
r1

17

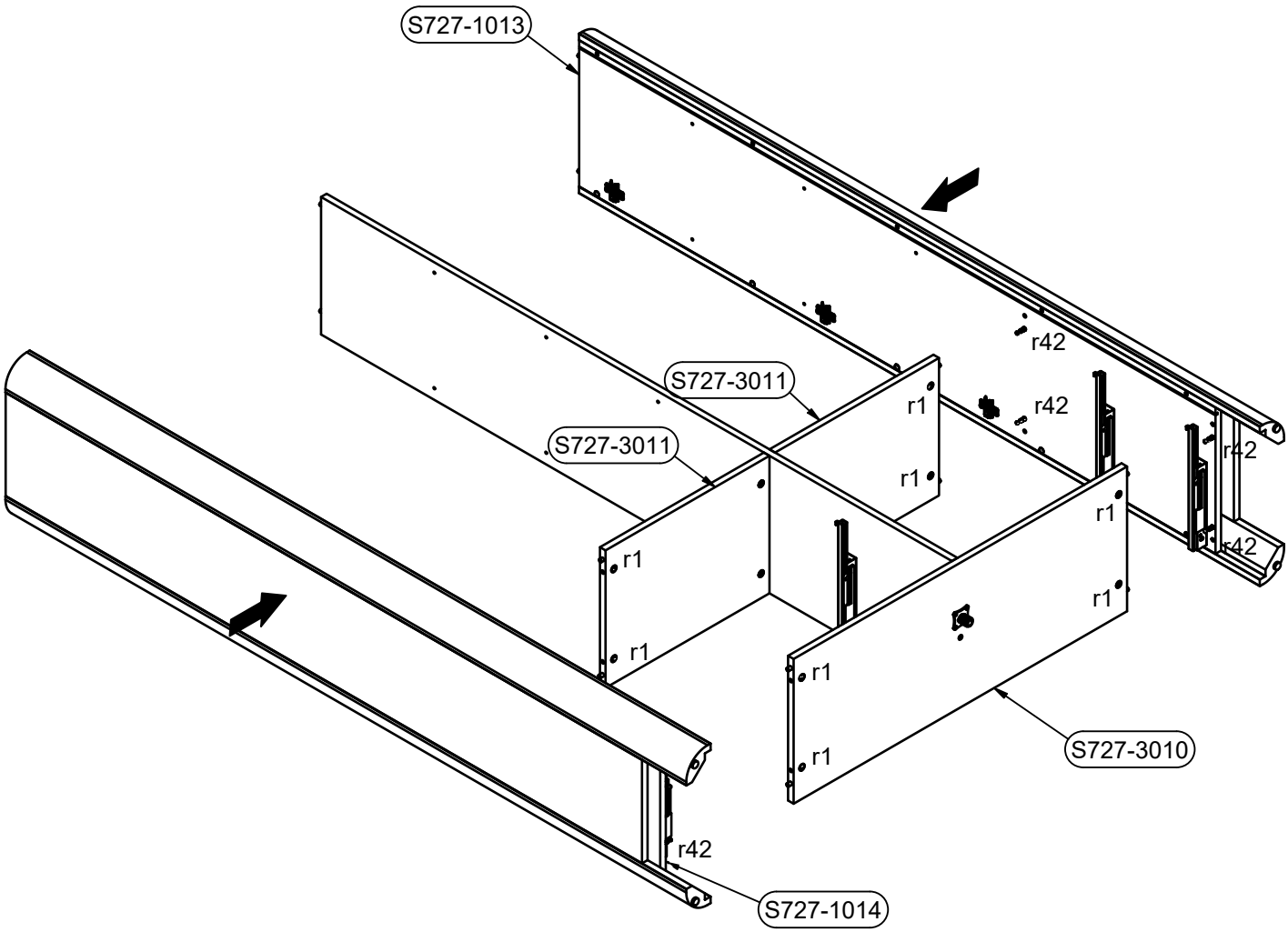
S727-1013
r42
S727-3011
r1
r42
S727-3011
r1
r42
r1
r1
r42
r1
r1
r1
r1
S727-3010
r42
S727-1014

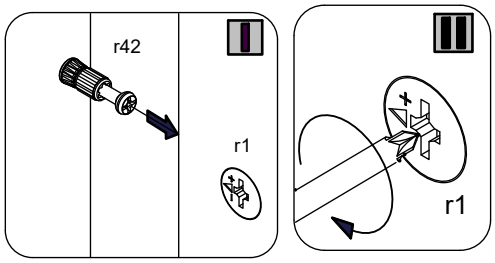
r42
r1
r1

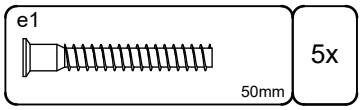
e1
50mm
5x

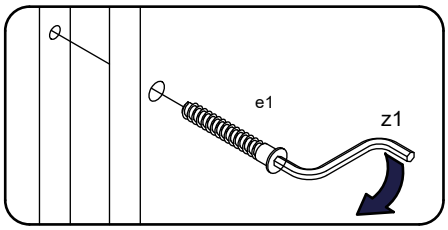
e1
z1

18

e1
S727-2005
S727-1013
e1
e1
e1

19

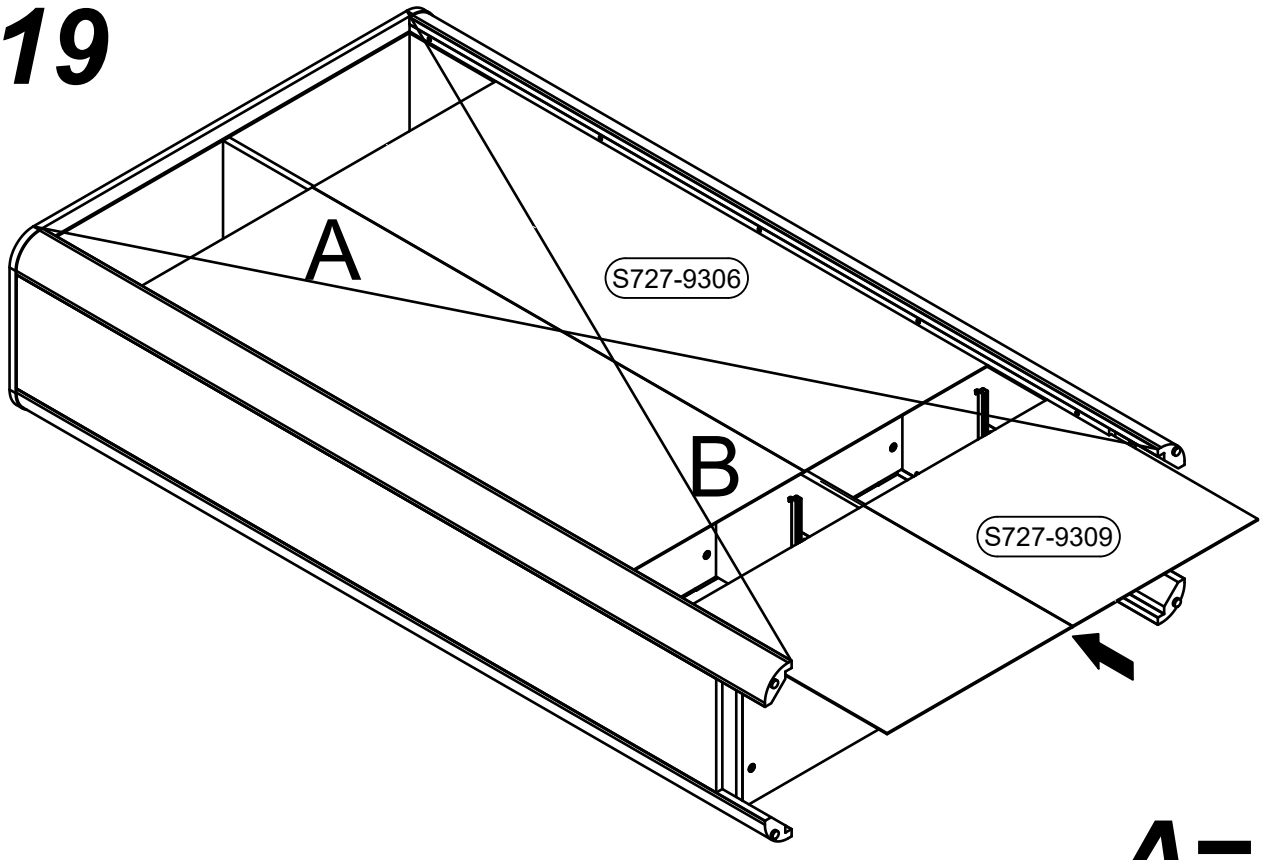
A
S727-9306
B
S727-9309

A=B

p55 2.9x16mm	22x	l2	11x	k148\6	1x	n108	6x

20

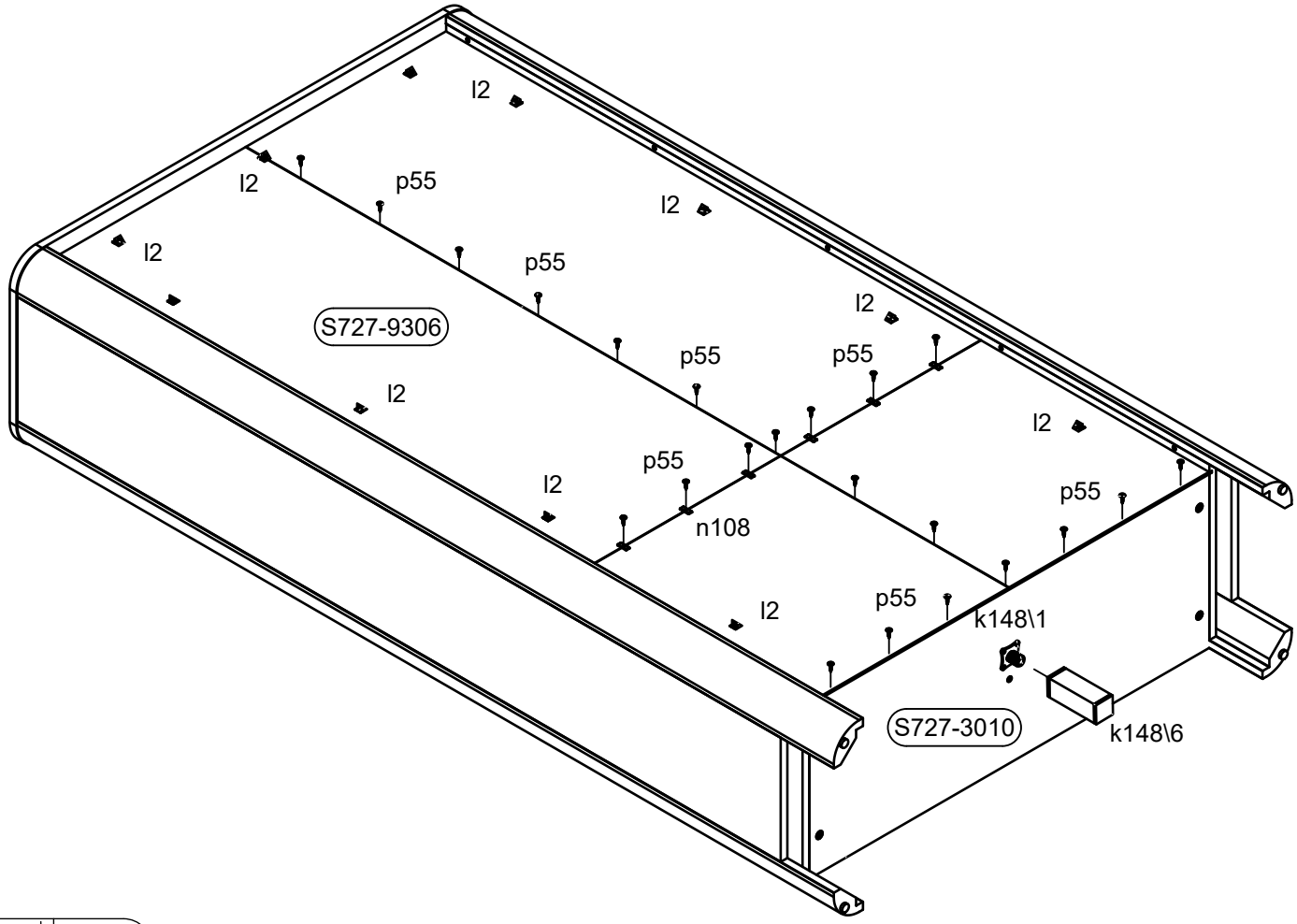

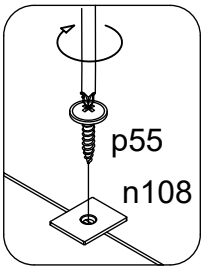

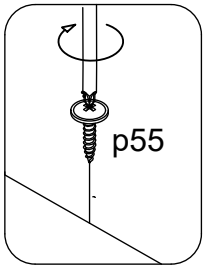

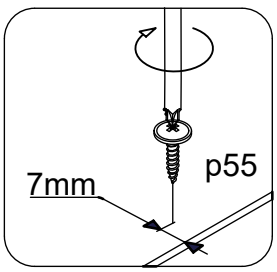

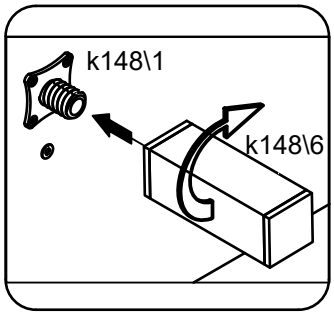

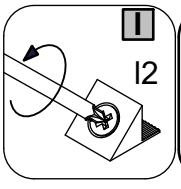

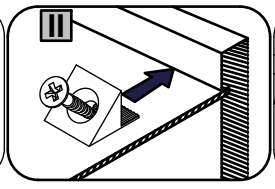

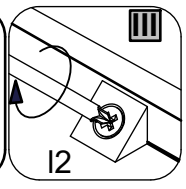

21

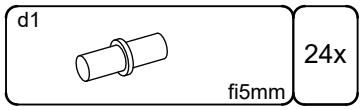
d1
fi5mm
24x

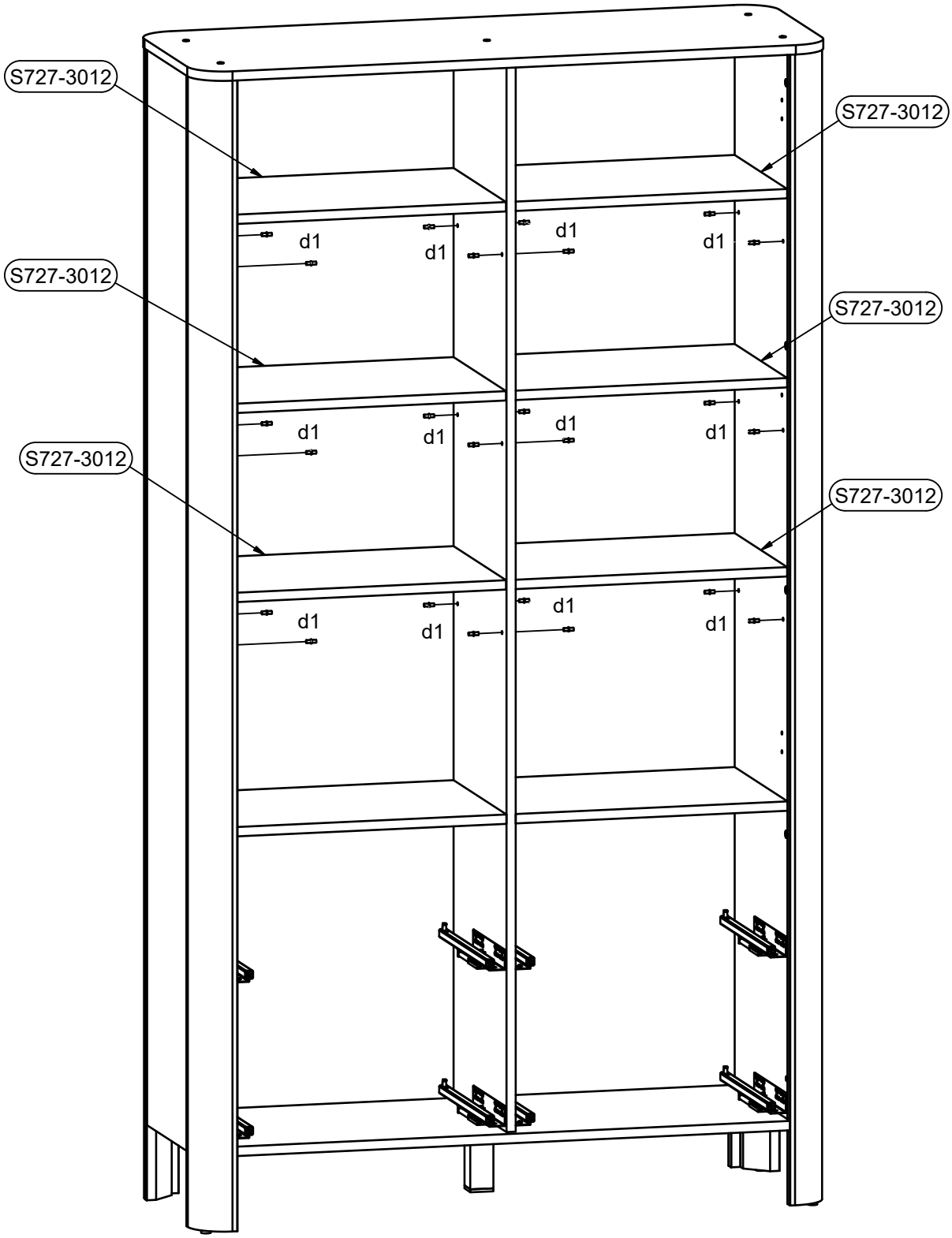
S727-3012
S727-3012
S727-3012
S727-3012
S727-3012
d1

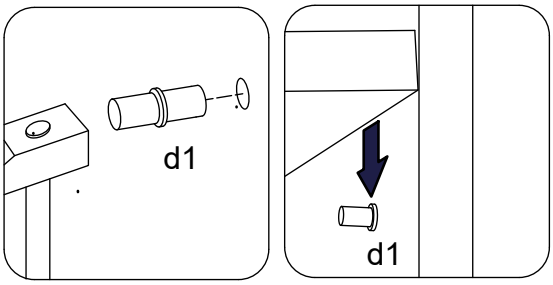
d1
d1

22

b90 6x

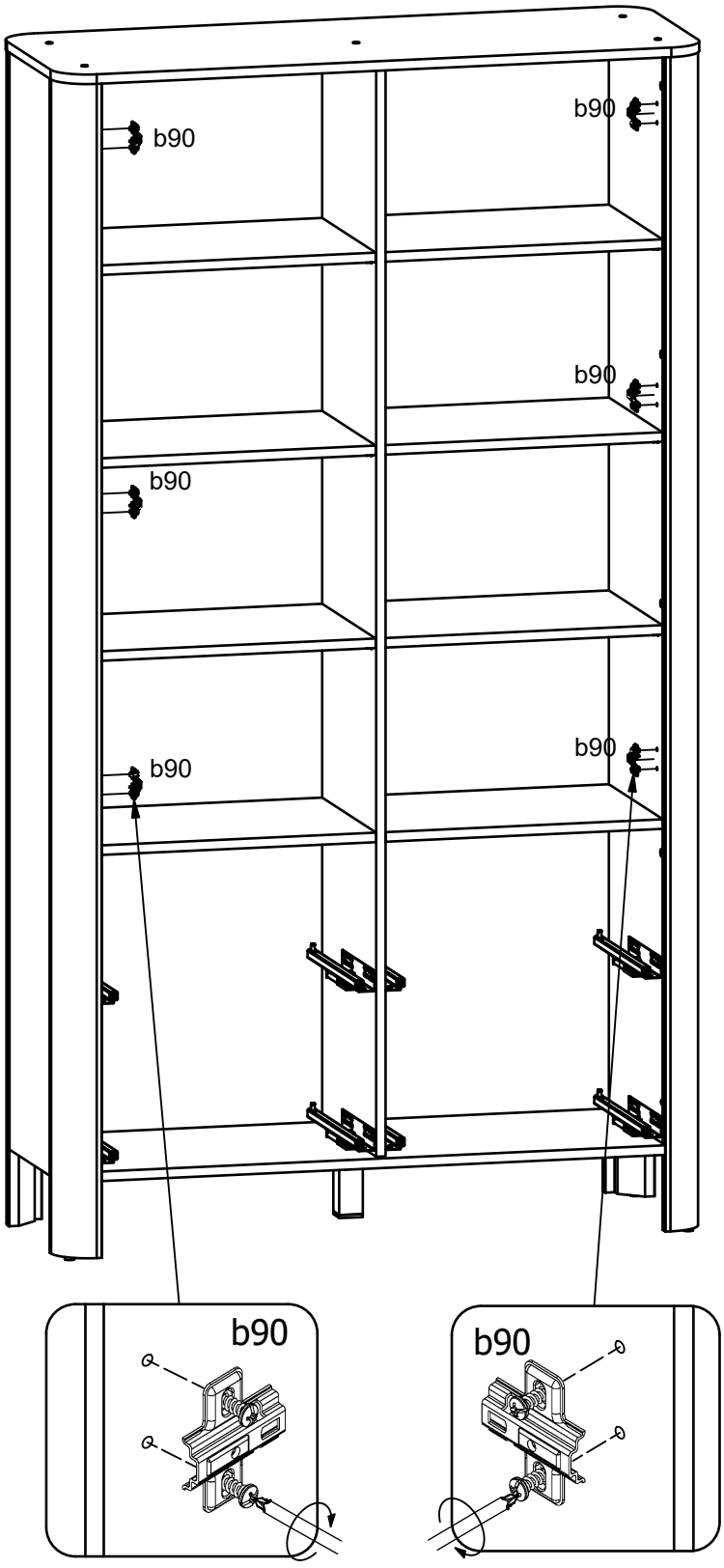

r42	8x	f25	16x	f1	16x	r15	8x
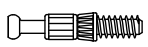		 6.5x40 mm		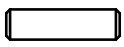 30mm		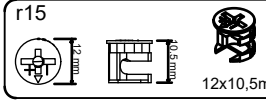 12x10,5mm	

23

2x

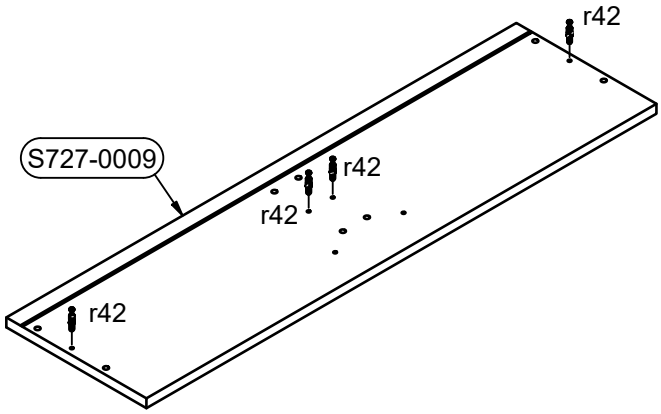

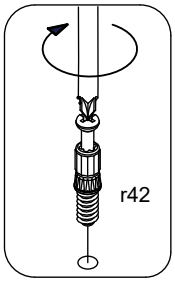

4x

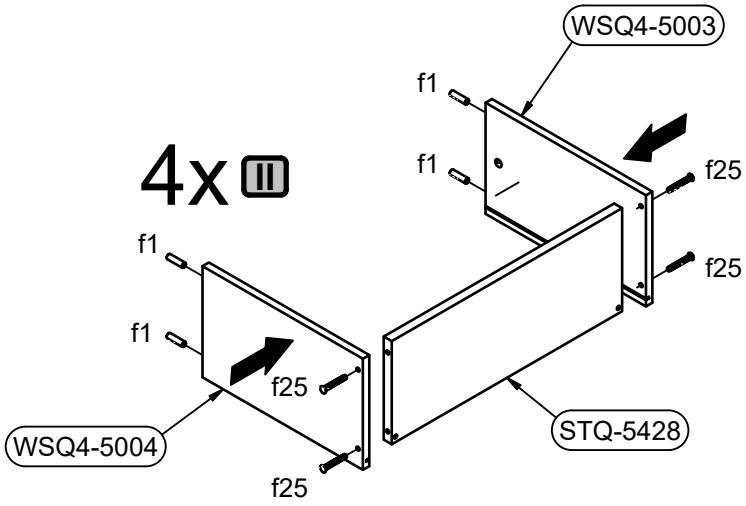

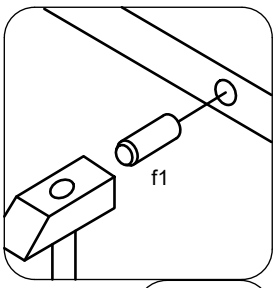

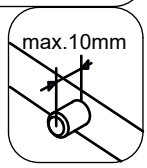

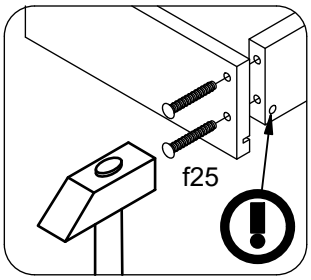

2x

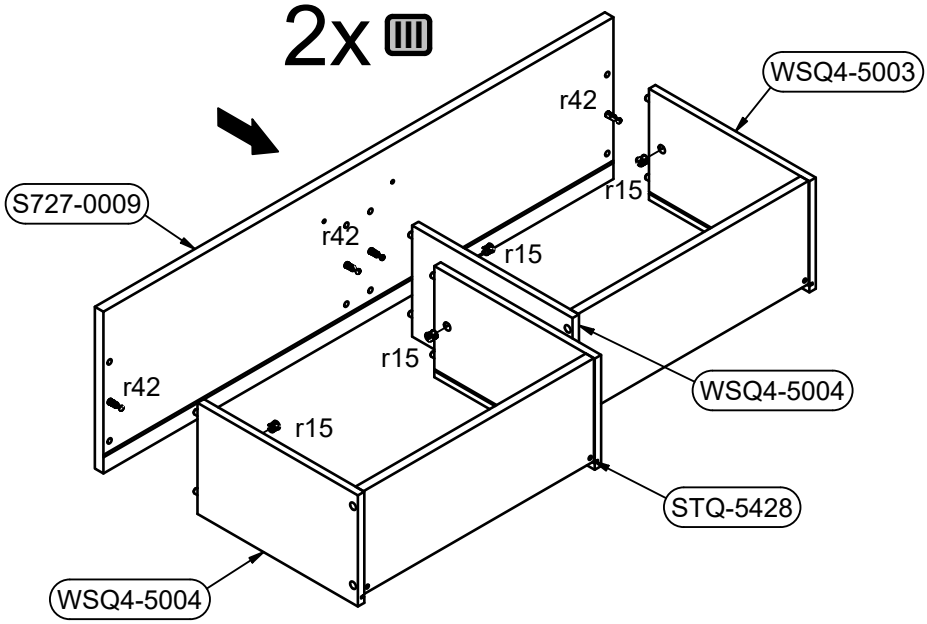

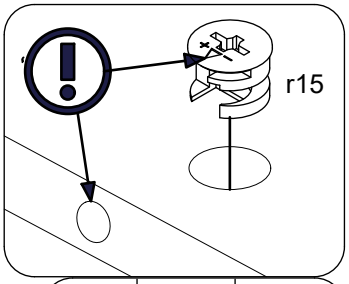

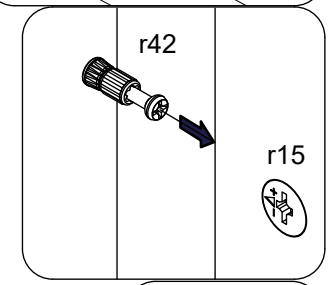

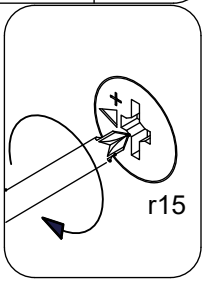

p87	4x	c666	2x	p55	20x
Ø4x25 mm		L140/128mm		2.8x16mm	

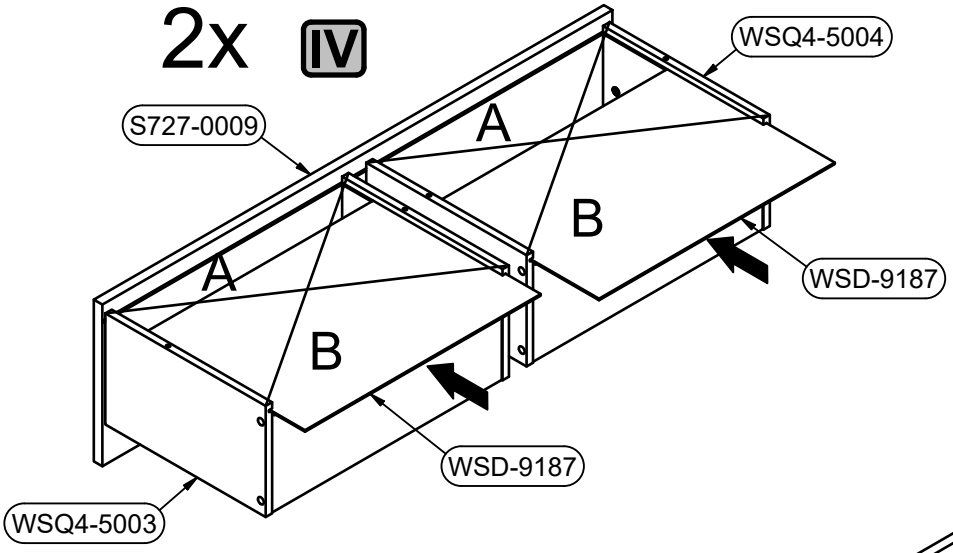

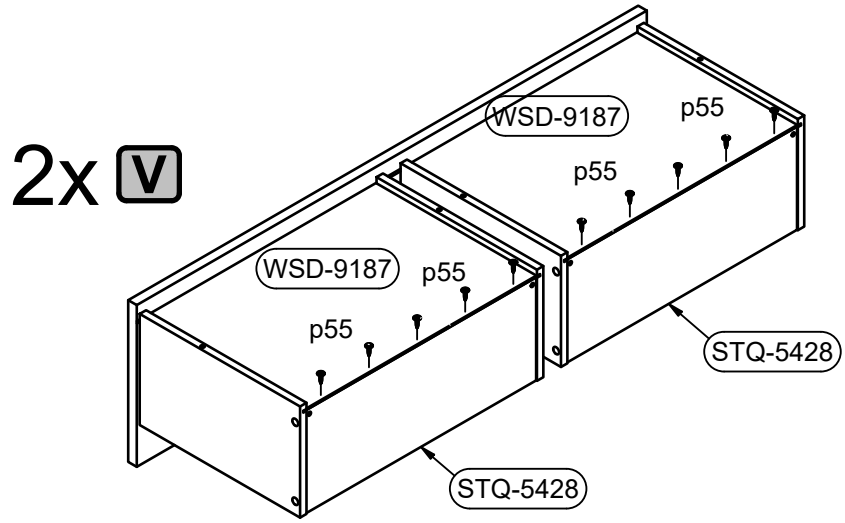

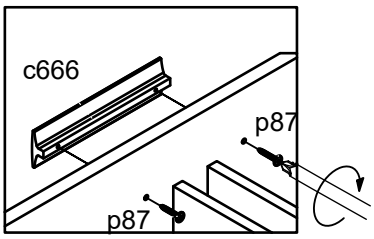

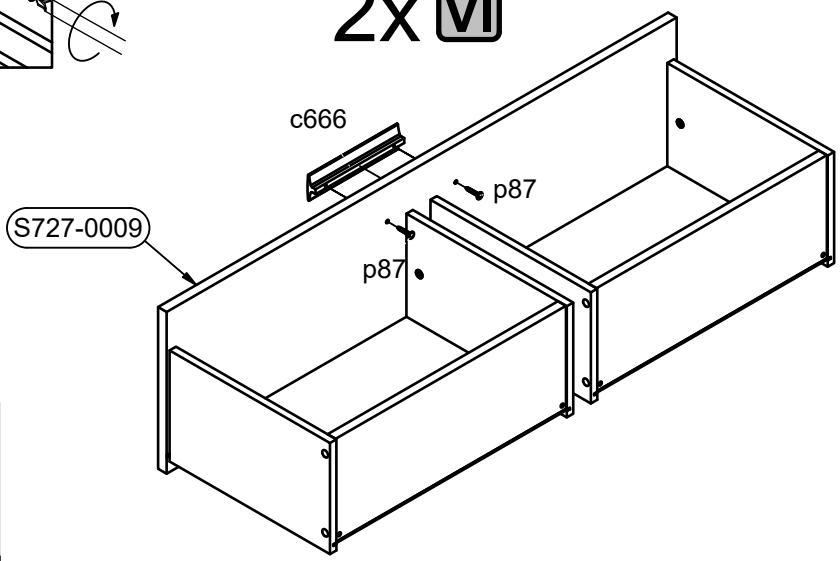

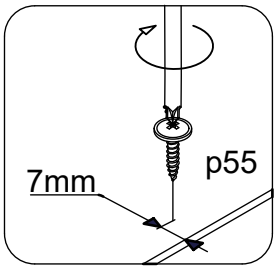

24

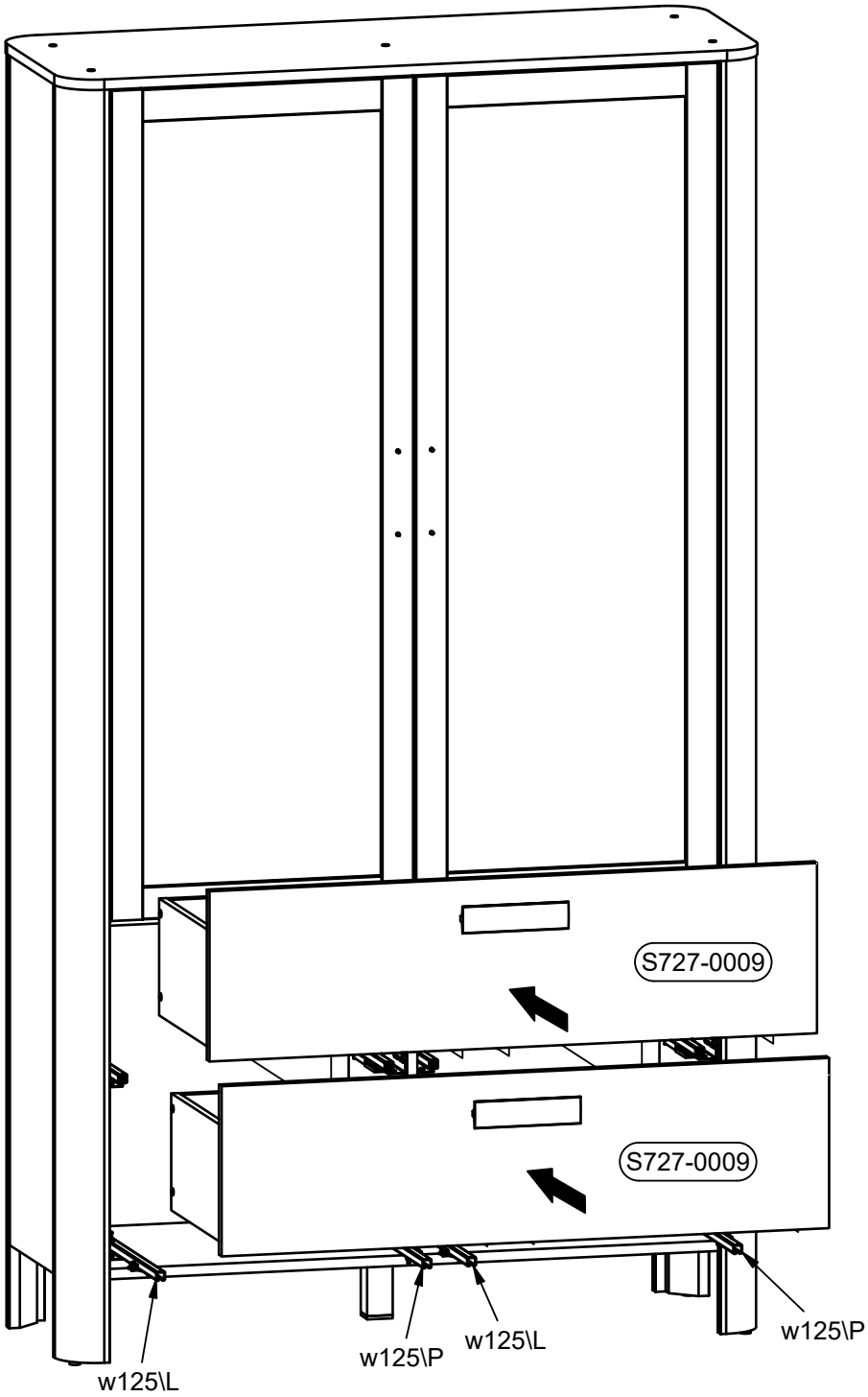

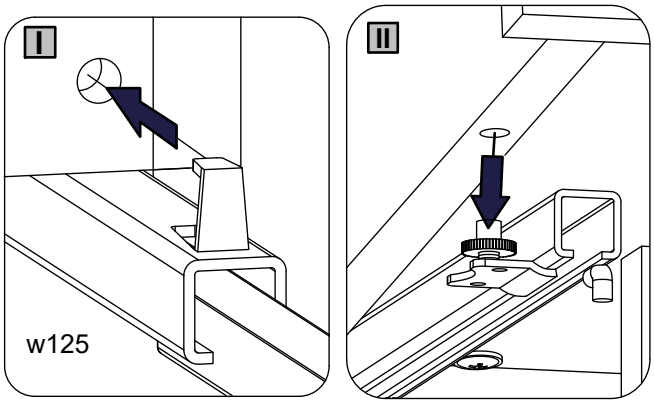

25

p87		c666	
Ø4x25 mm	4x	L140/128mm	2x

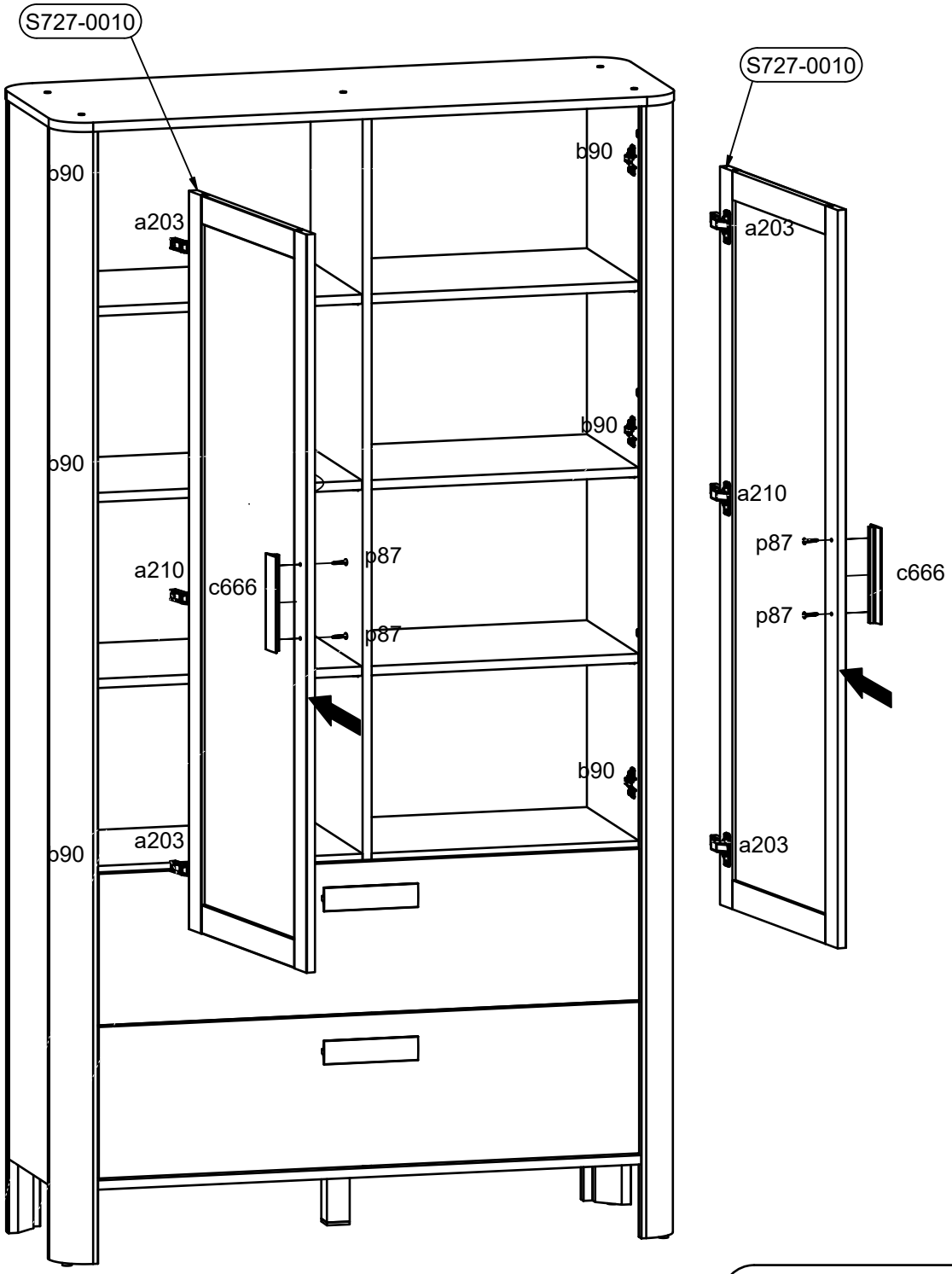

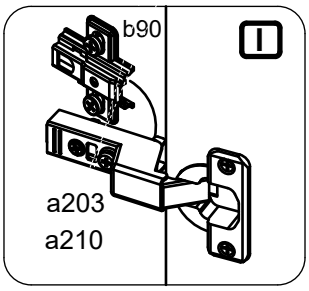

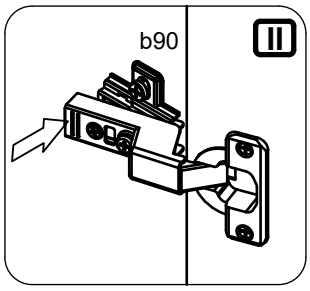

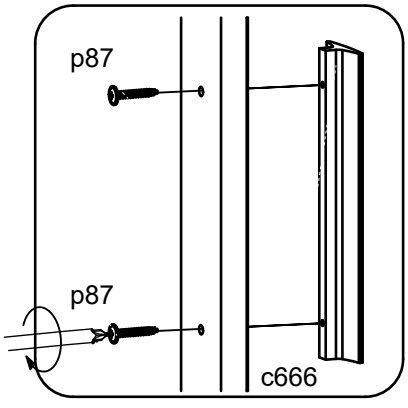

26

p51	2x	n14\2	1x
3.5x15mm			

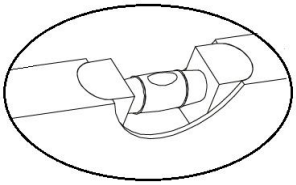

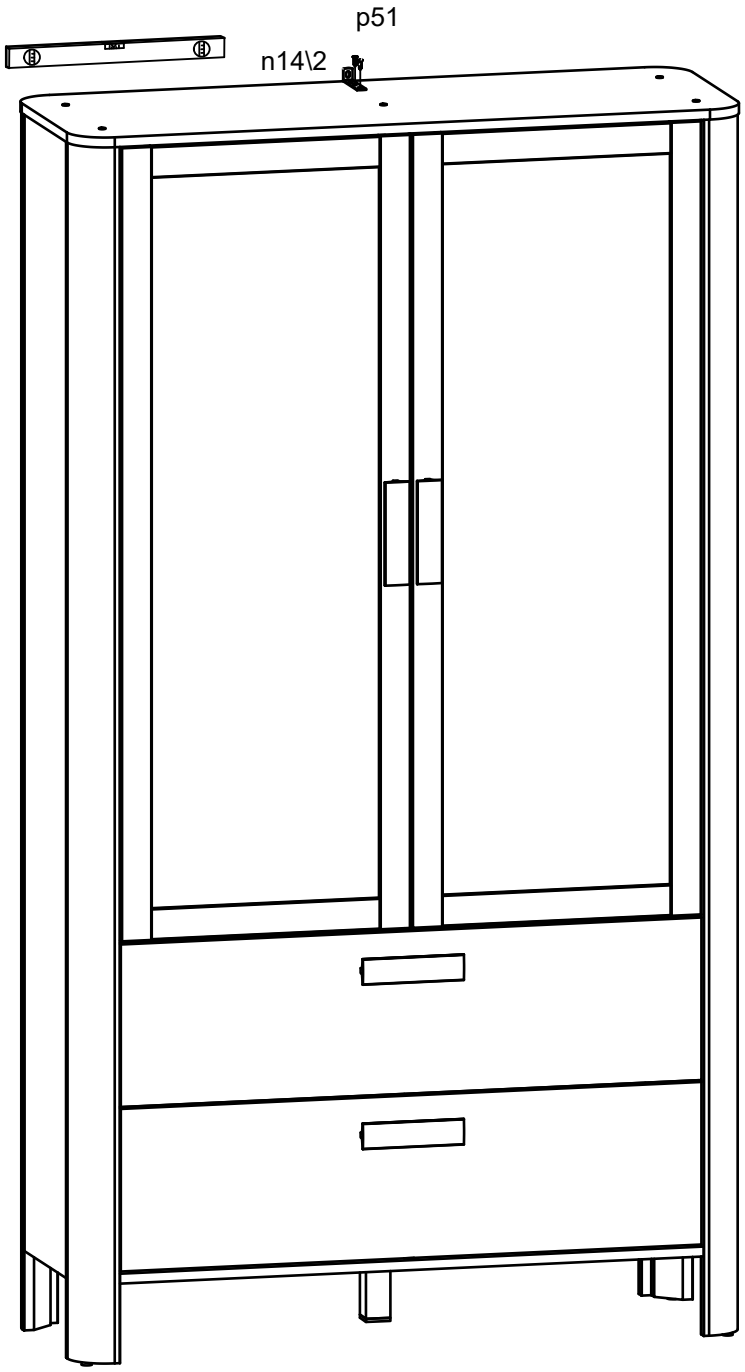



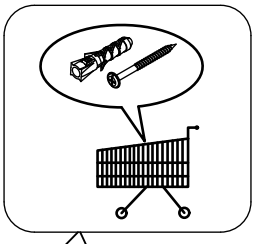

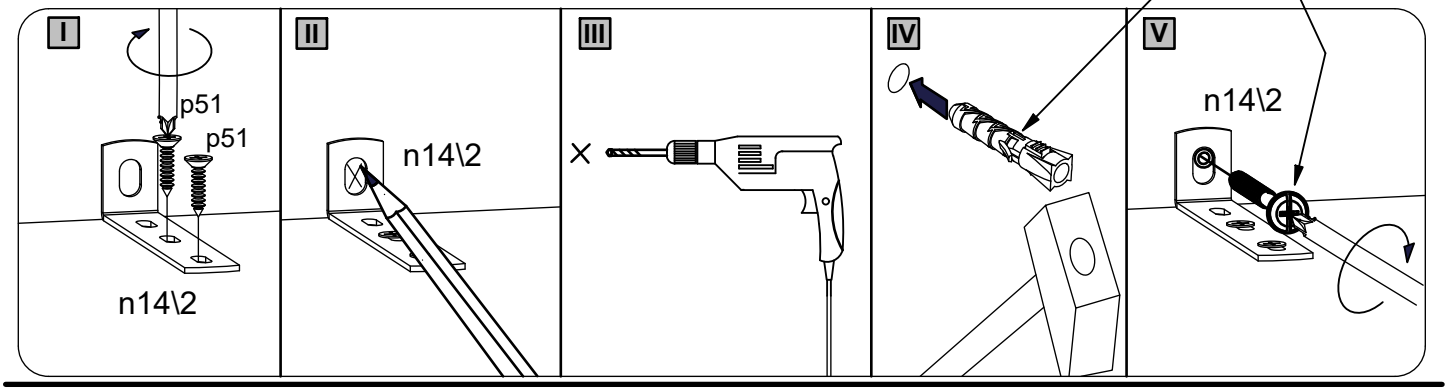

27

s59 Ø14mm	8x	
p55 2.8x16mm	4x	



