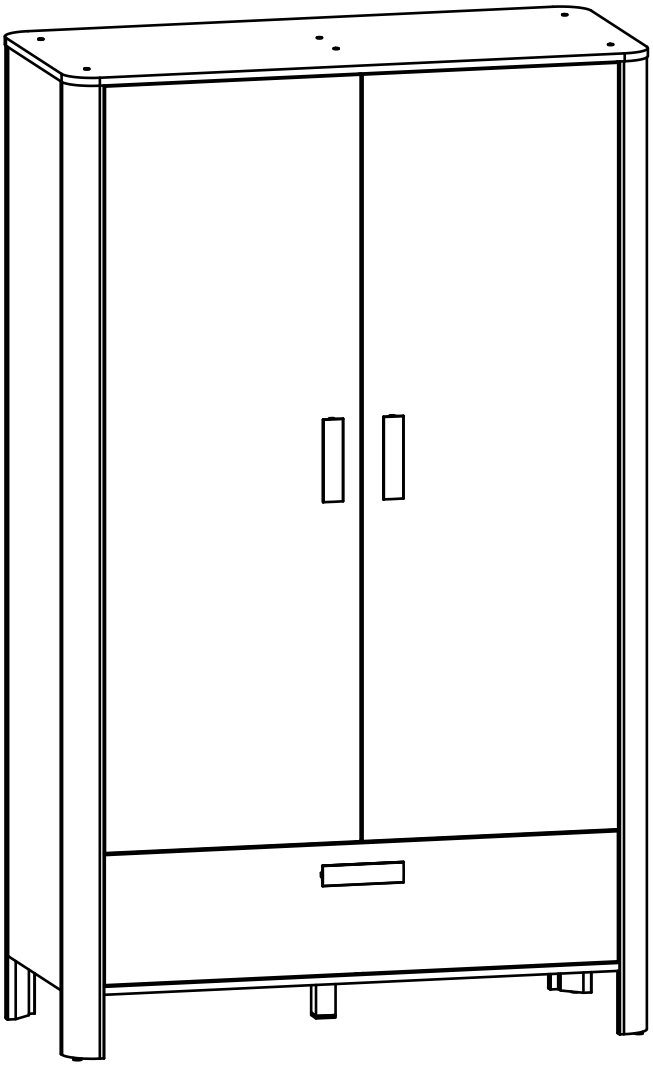


120min


LE TRI
FACILE
BAC DE TRI
FR
Donnez ou recyclez vos meubles.
Association
OU
Magasin
OU
Déchèterie
https://quefairedemesdechets.fr

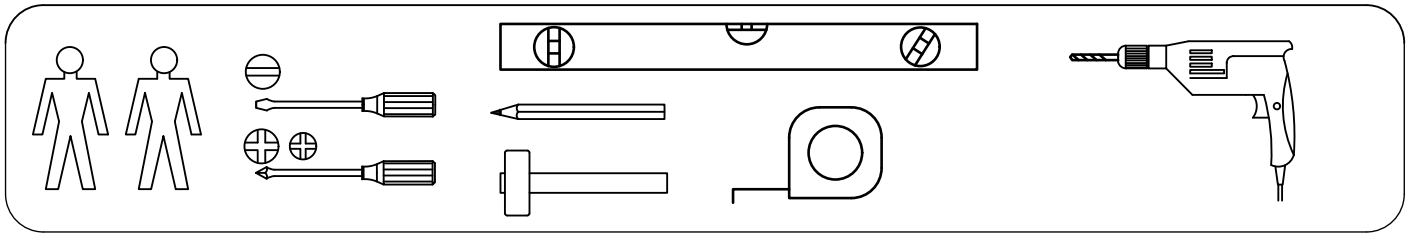

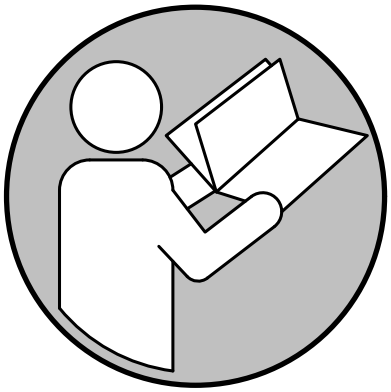

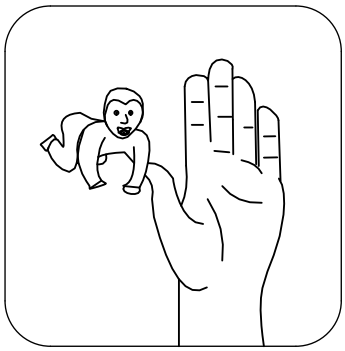

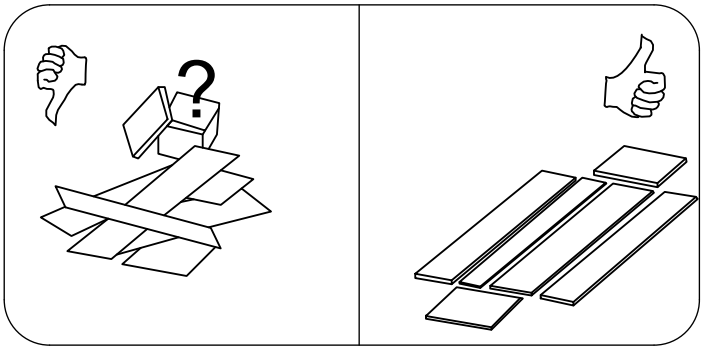

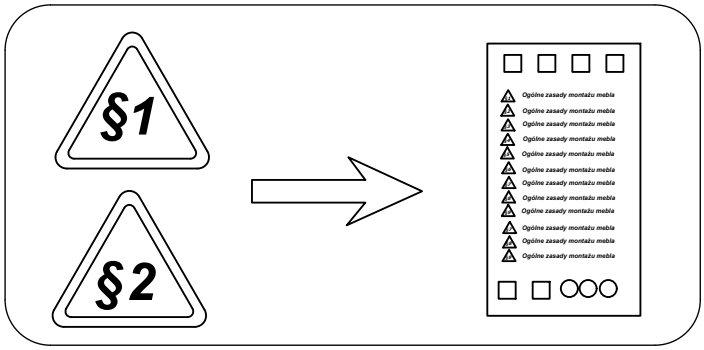
§1
§2
Ogólne zasady montażu mebla

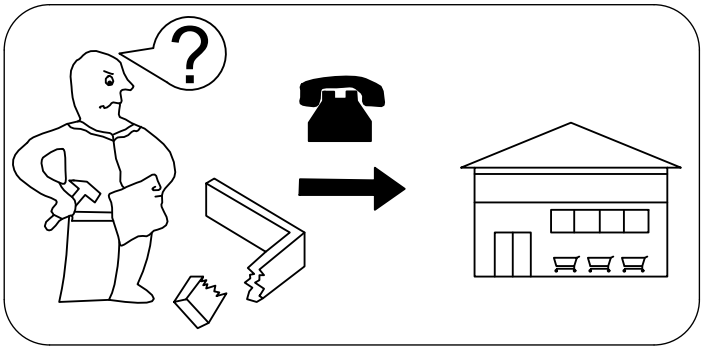

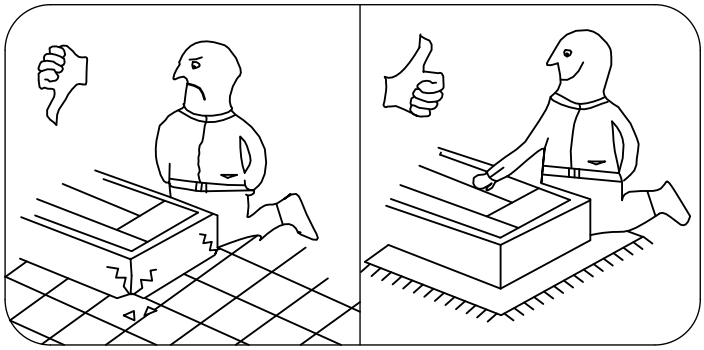

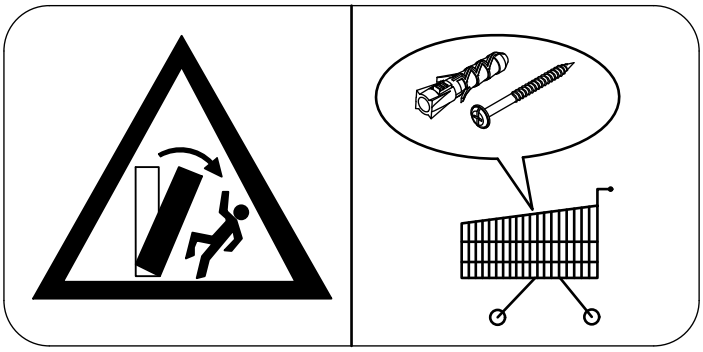

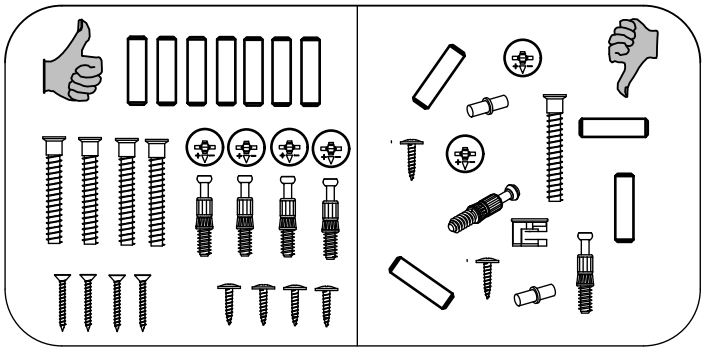

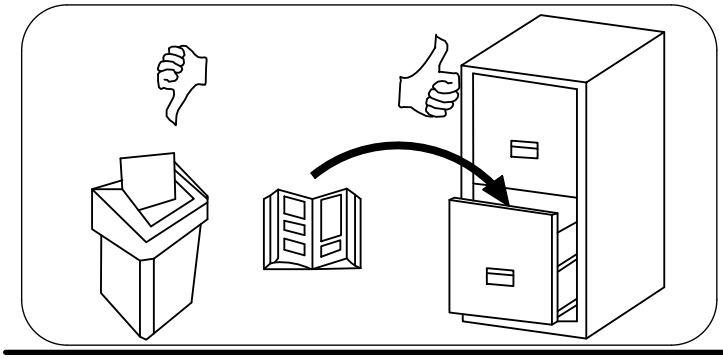

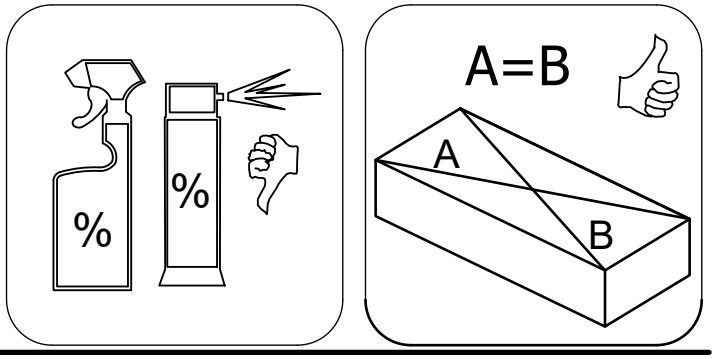
A=B
A
B

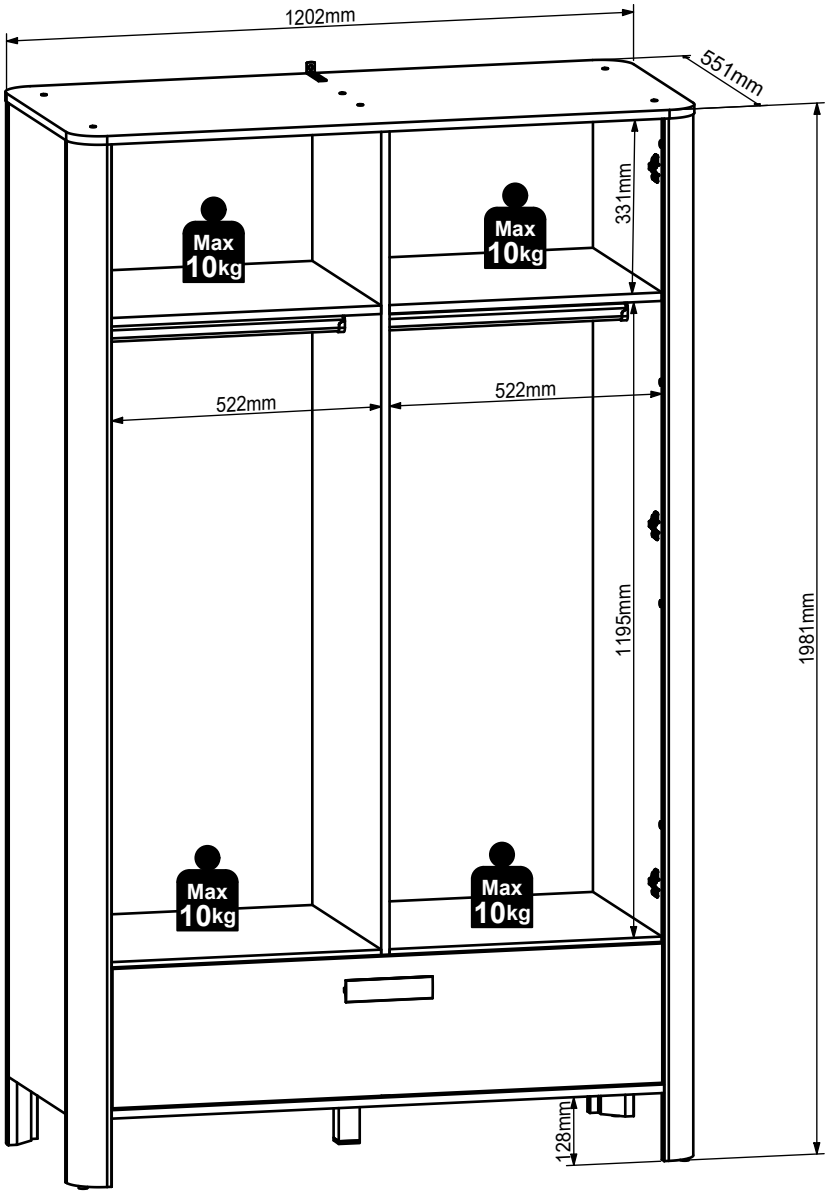
1202mm
551mm
331mm
Max
10kg
Max
10kg
522mm
522mm
1195mm
1981mm
Max
10kg
Max
10kg
128mm

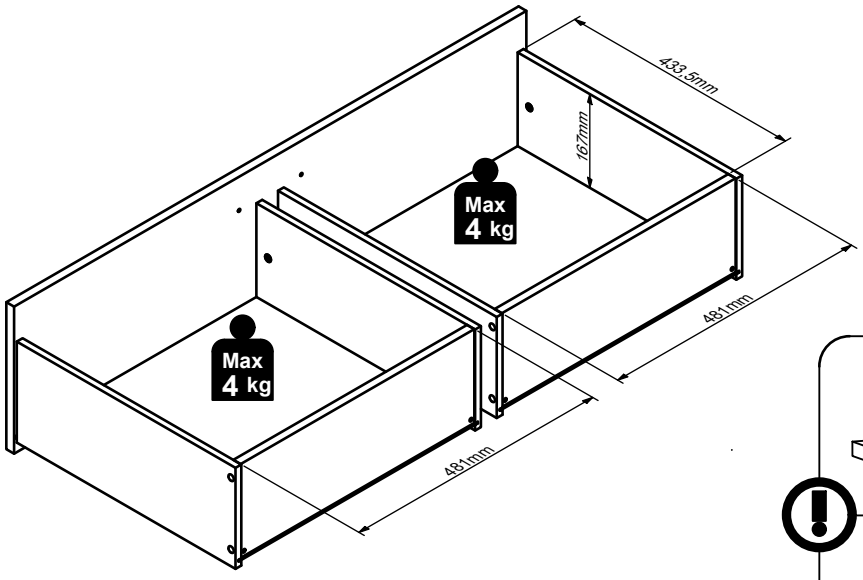
433.5mm
167mm
Max
4 kg
Max
4 kg
481mm
481mm

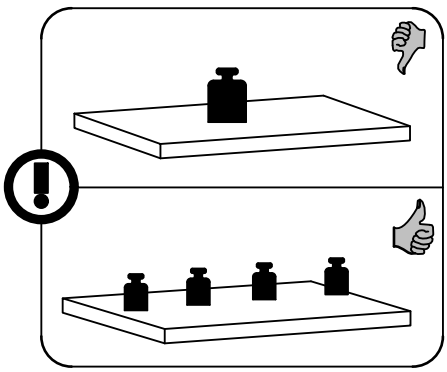

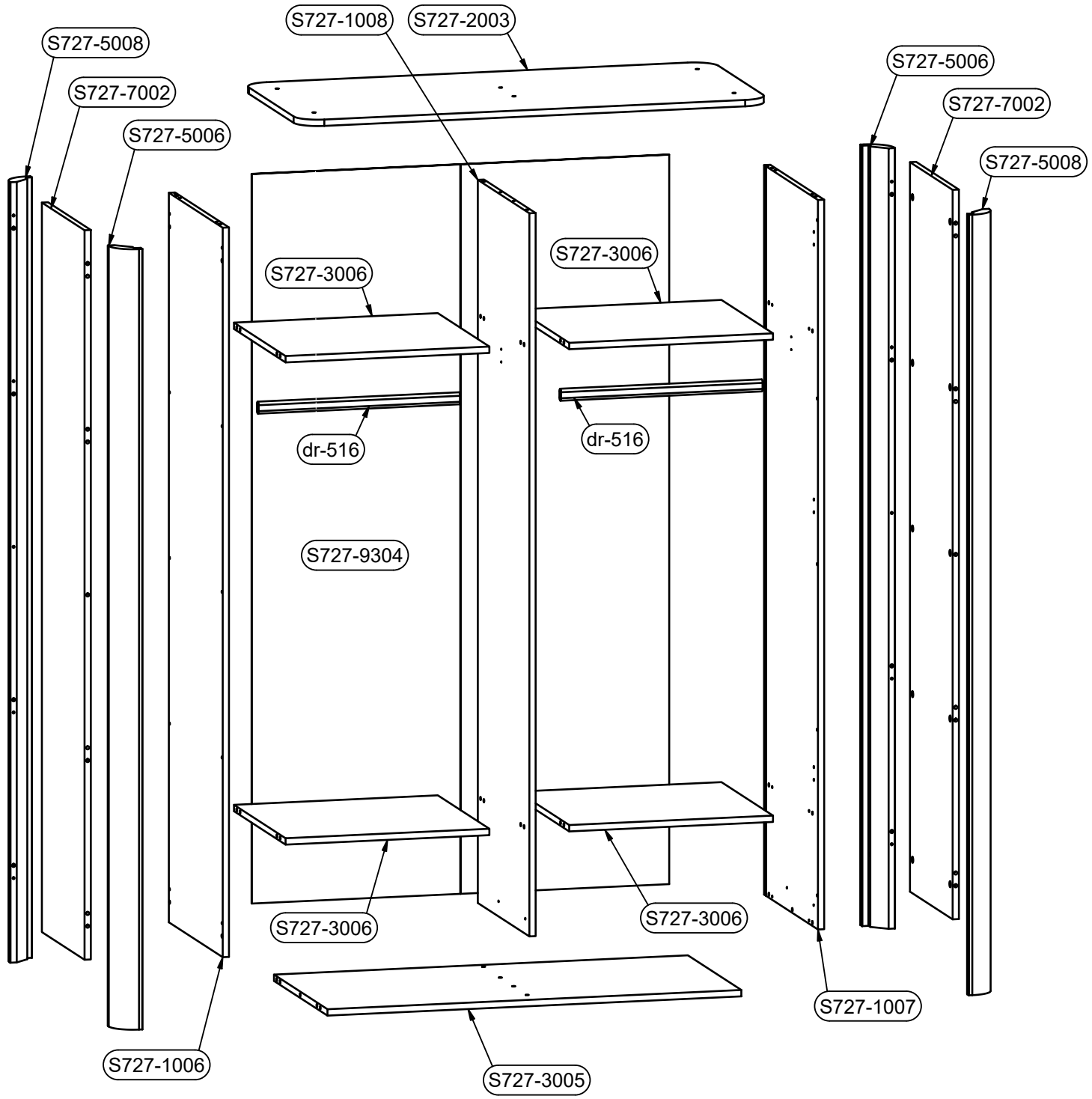
S727-1008
S727-2003
S727-5008
S727-7002
S727-5006
S727-5006
S727-7002
S727-5008
S727-3006
S727-3006
dr-516
dr-516
S727-9304
S727-3006
S727-3006
S727-1007
S727-1006
S727-3005

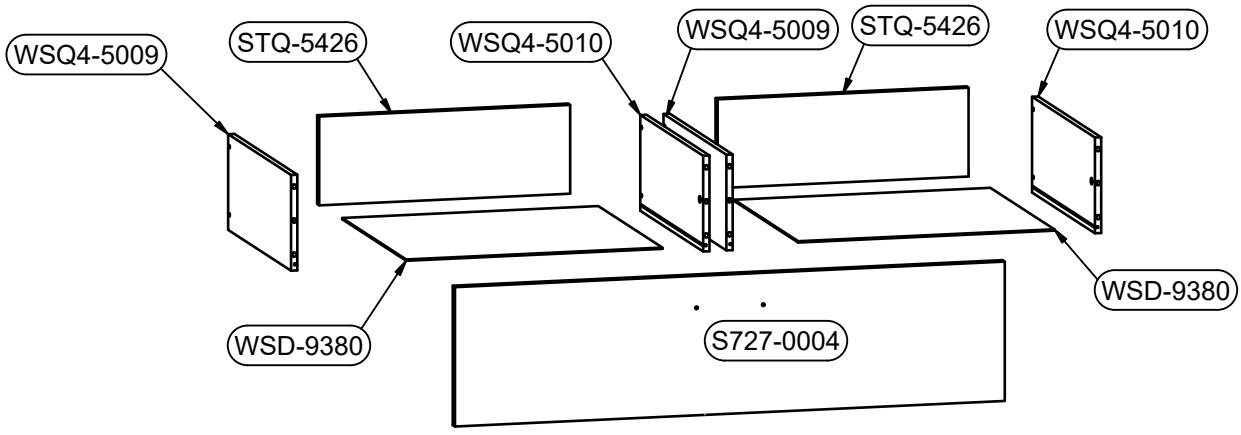
WSQ4-5009
STQ-5426
WSQ4-5010
WSQ4-5009
STQ-5426
WSQ4-5010
WSD-9380
WSD-9380
S727-0004

B1	B2	C1	C2	C3	C4	D
S727-0003	-.1	1544	525	16	2	4/5
S727-0004	-.1	1054	262	16	1	1/5
S727-1006	-.4	1832	515	16	1	3/5
S727-1007	-.4	1832	515	16	1	3/5
S727-1008	-.1	1816	493	16	1	2/5
S727-2003	-.3	1202	551	16	1	4/5
S727-3005	-.2	1060	511	16	1	1/5
S727-3006	-.2	522	493	16	4	1/5
S727-5006	-.3	1960	99	36	2	2/5
S727-5008	-.3	1960	99	36	2	2/5
S727-7002	-.1	1832	408	16	2	5/5
S727-9304	-.3	1832	1069	2.5	1	3/5
STQ-5426	-	481	167	15	2	4/5
WSD-9380	-	491	458	2.5	2	1/5
WSQ4-5009	A.2	450	180	12	2	1/5
WSQ4-5010	A.2	450	180	12	2	1/5
dr-516	-	516	30	15	2	4/5

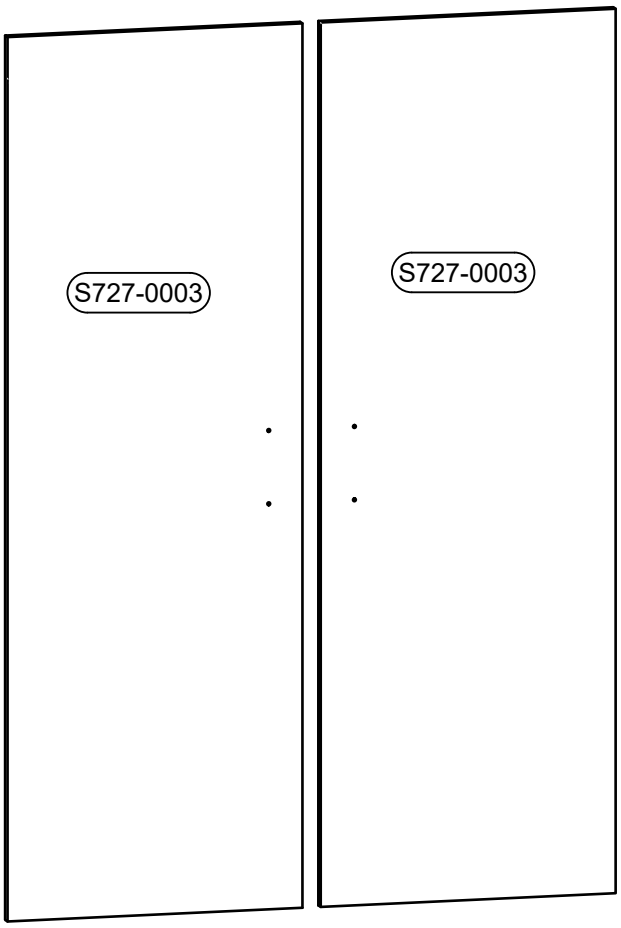

1:1

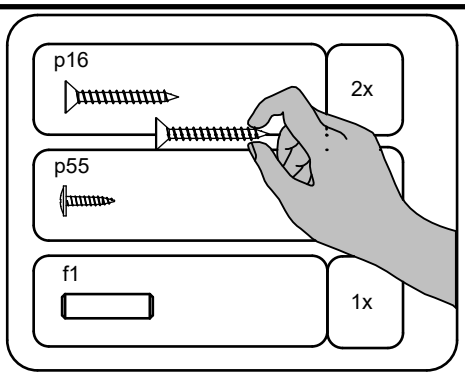

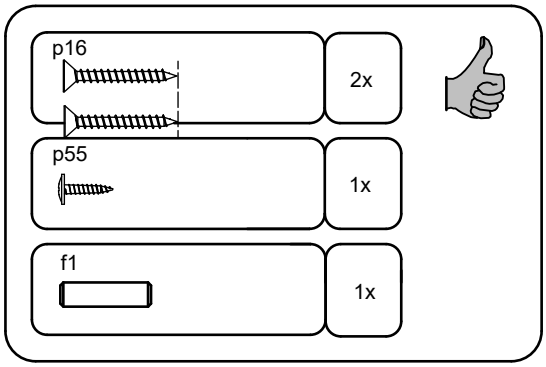

e1 — 50mm — 8x

e3 — 6x13mm — 8x

f1 — 30mm — 54x

f6 — Ø8x50 mm — 4x

f25 — 6.5x40 mm — 8x

p51 — 3.5x15mm — 26x

p55 — 2.9x16mm — 40x

p64 — Ø4x40 mm — 20x

p87 — Ø4x25 mm — 6x

r1 — 15x12mm — 40x

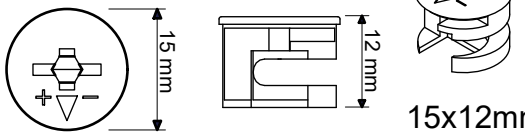

r15 — 12x10,5mm — 4x

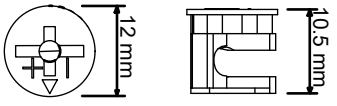

r10 — 4x



r42 — 36x

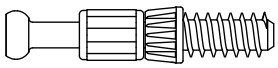

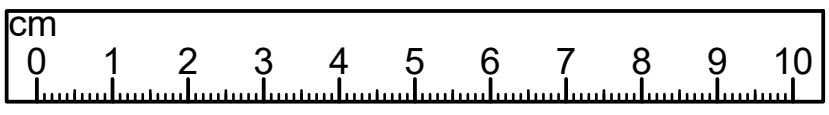

~~1:1~~

a203 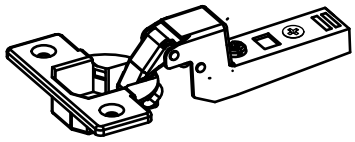	4x	a210 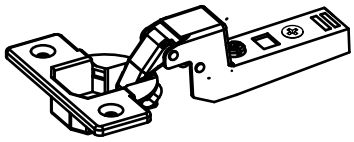	2x
b90 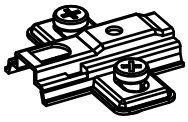	6x	c666 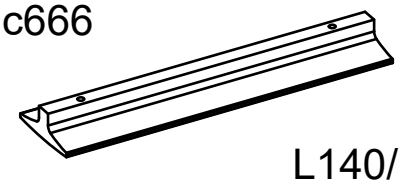 L140/128mm	3x
k1 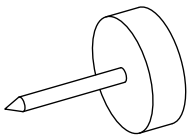	4x	k148\1 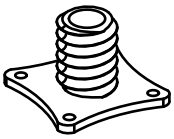	1x
k148\6 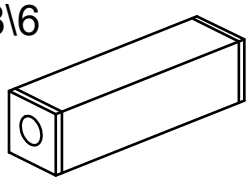	1x	l2 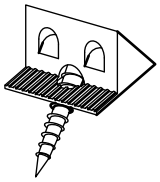	13x
n14\2 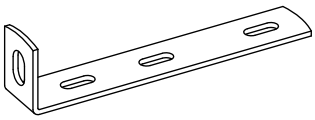	1x	n267 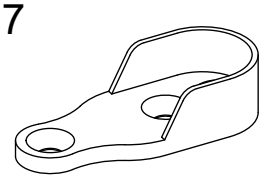	4x
s68 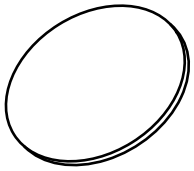 Ø20mm	8x	s59 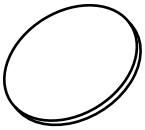 Ø14mm	8x
w126\L 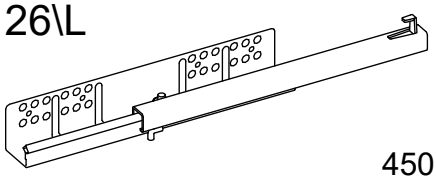 450mm	2x	z1 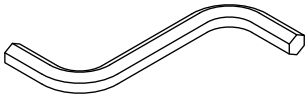 ⬡ 4mm	1x
w126\P 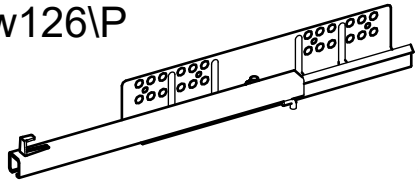 450mm	2x		

f1	20x	r1	20x	r42	10x	k1	2x
30mm		15x12mm					

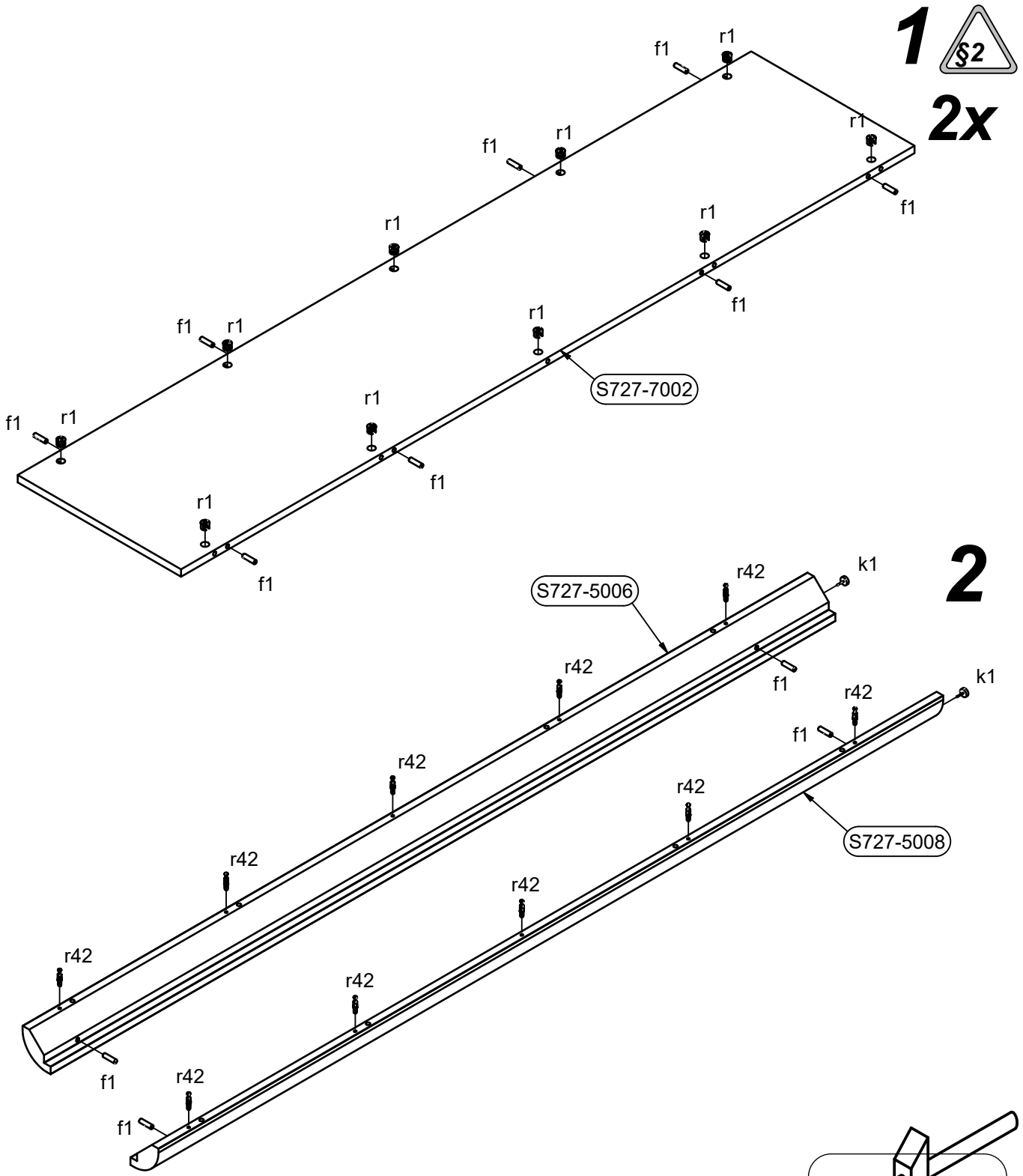

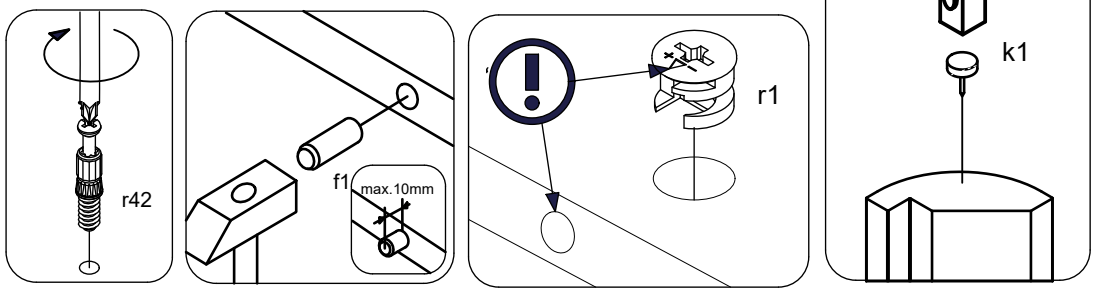

f1 30mm	2x	r42	6x	n267	1x	p51 3.5x15mm	2x
w126\L 450mm	1x	e3 6x13mm	2x				

3

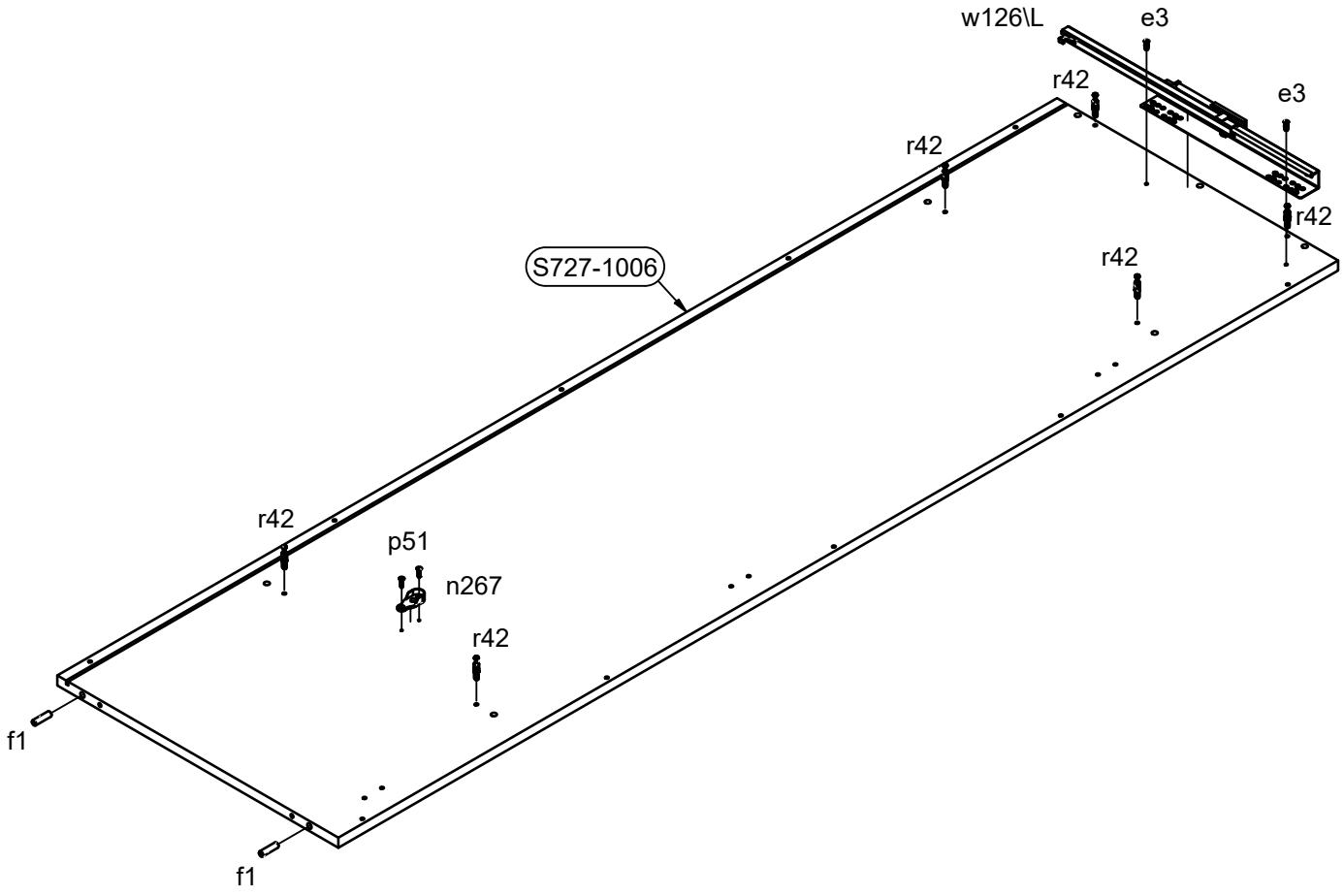

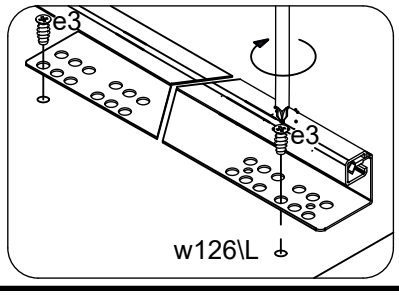

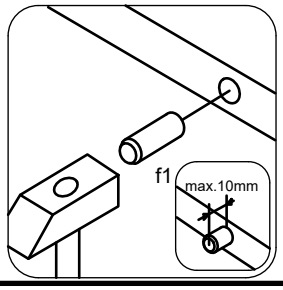

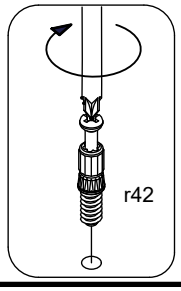

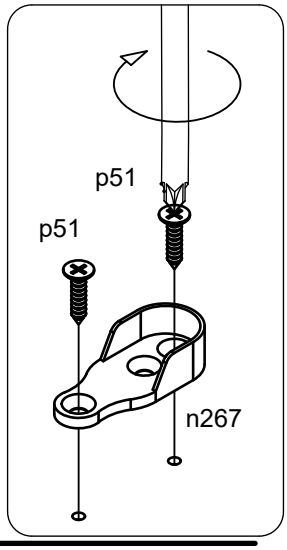

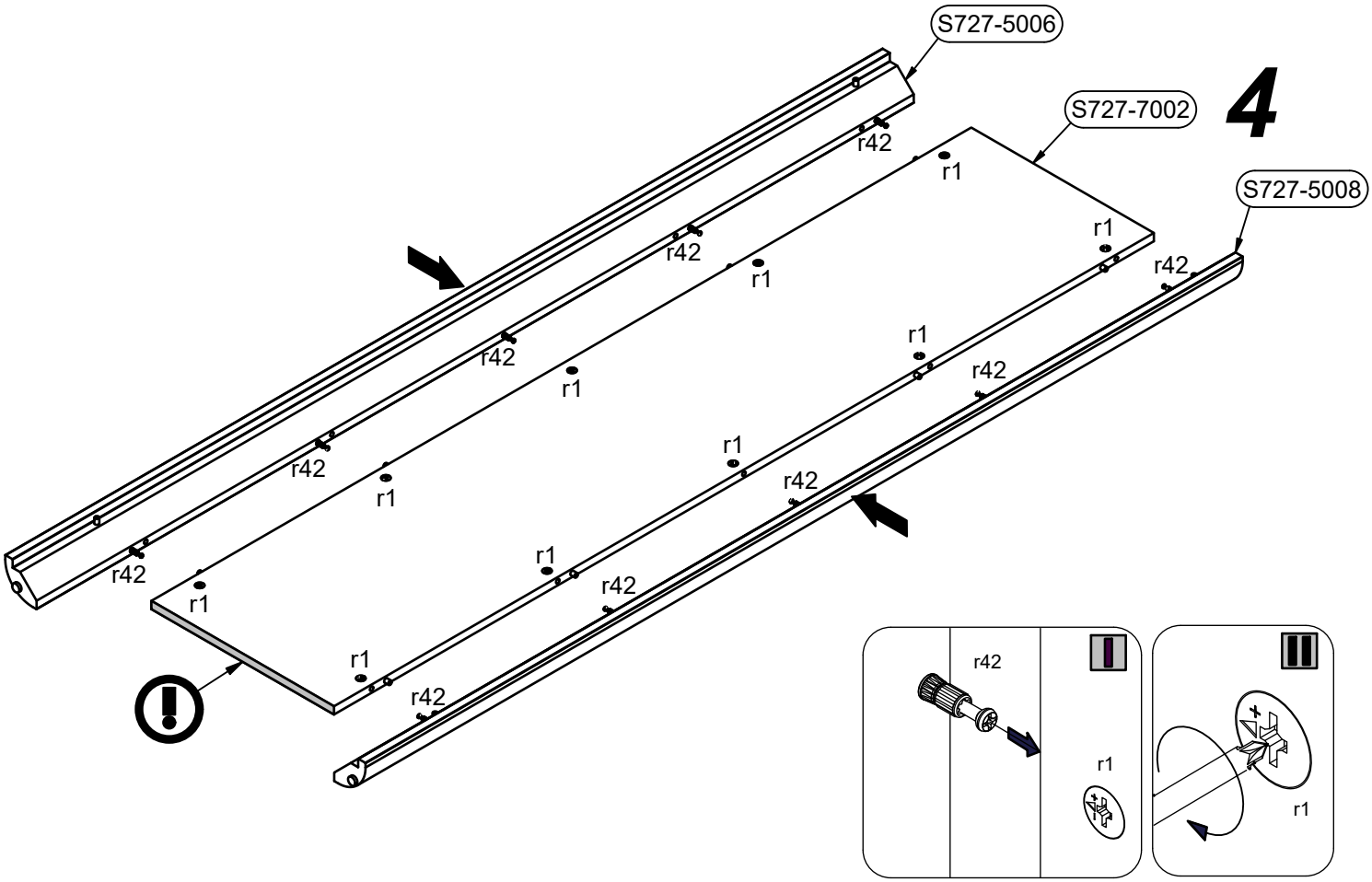
S727-5006
S727-7002
S727-5008
4
r42
r1

r42
r1
r1

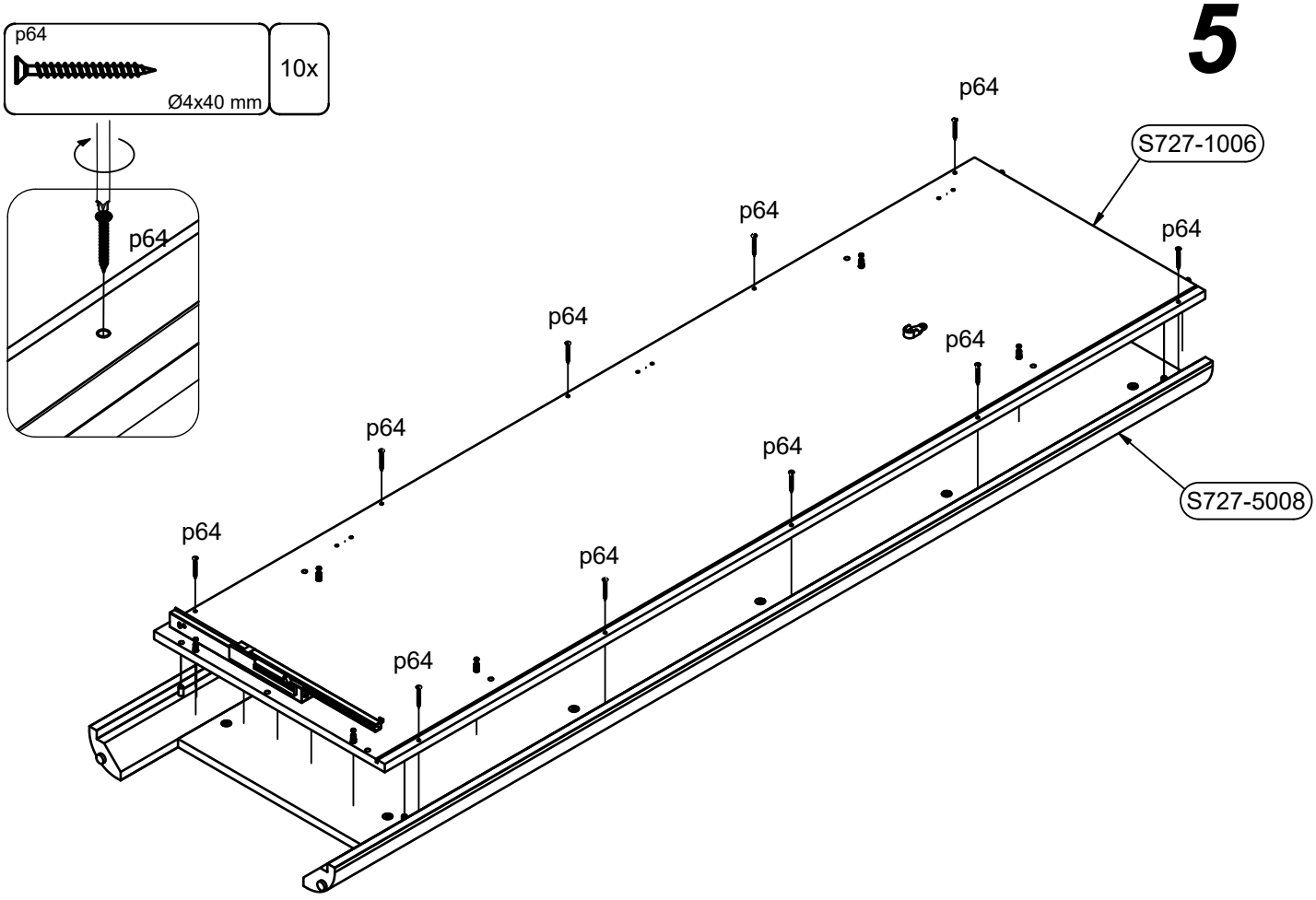
p64
Ø4x40 mm
10x
5
p64
S727-1006
S727-5008

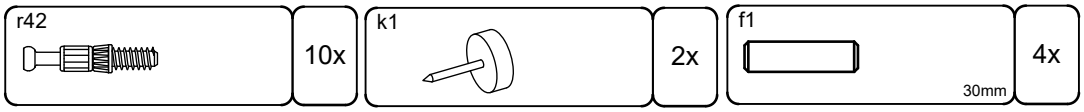
r42
10x
k1
2x
f1
30mm
4x

6

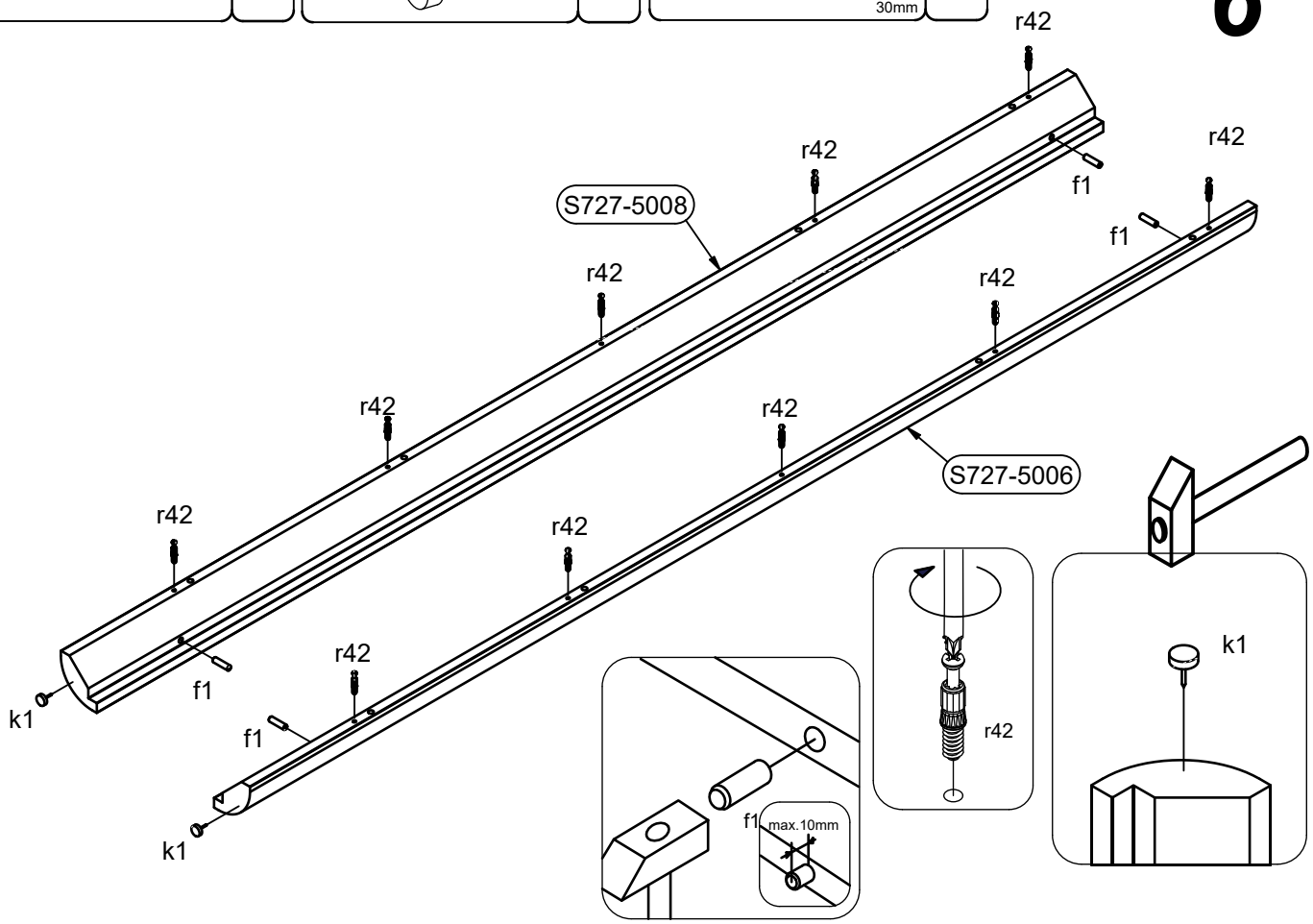
r42
S727-5008
f1
S727-5006
k1
max.10mm

7

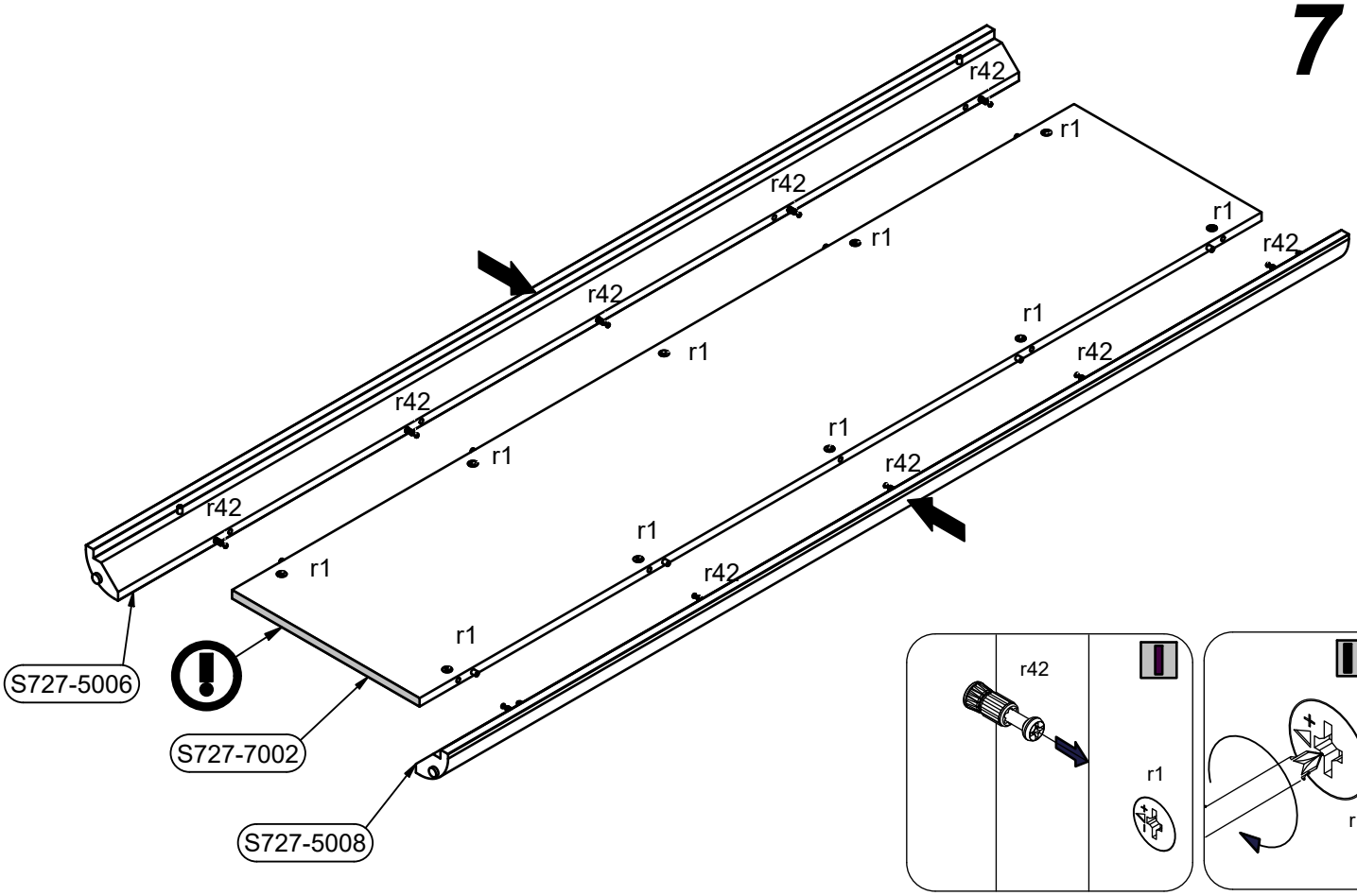
r42
r1
S727-5006
S727-7002
S727-5008

r42	6x	f1 30mm	2x	n267	1x	p51 3.5x15mm	2x
w126\P 450mm	1x	e3 6x13mm	2x				

8

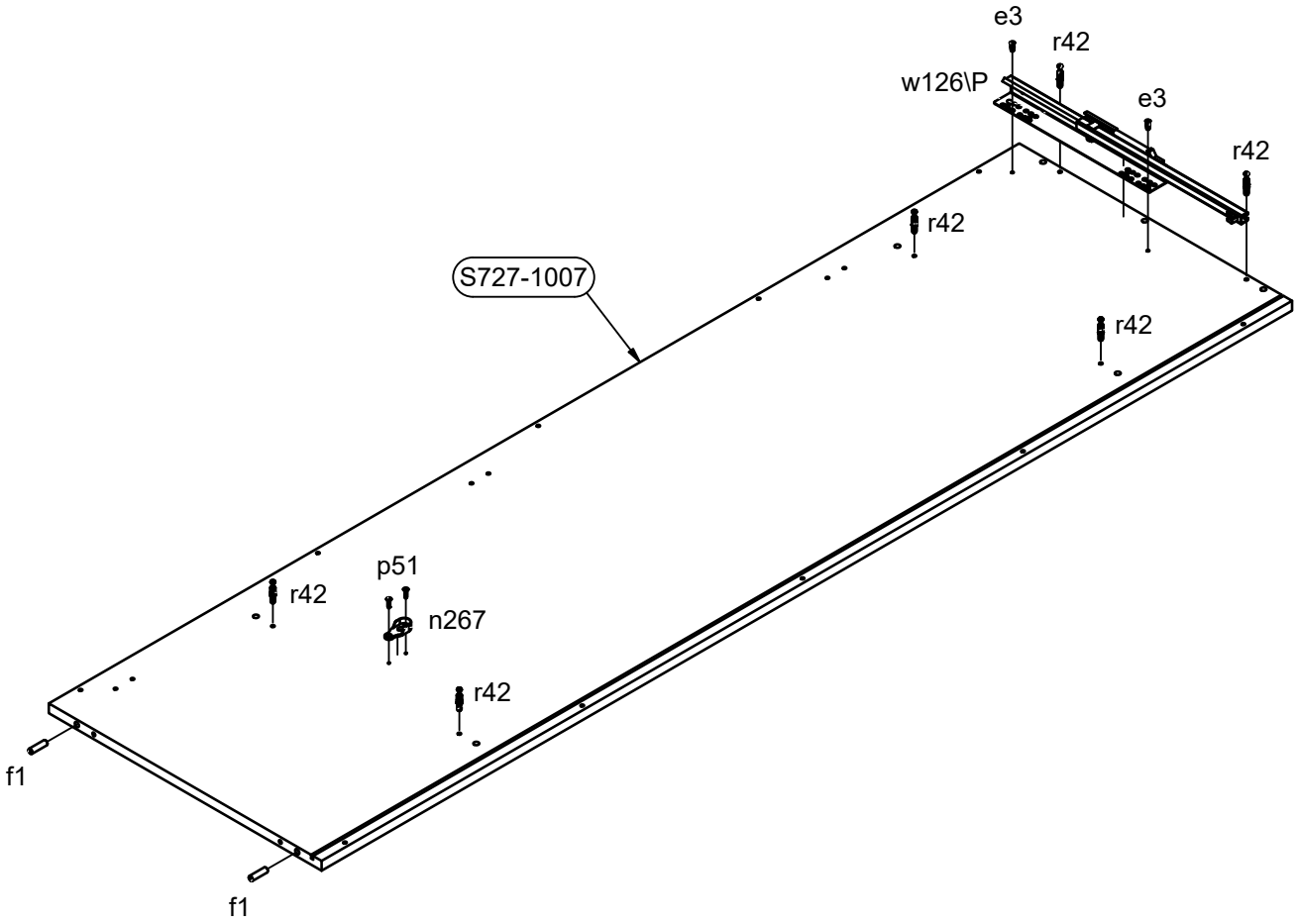

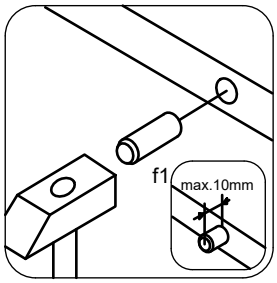

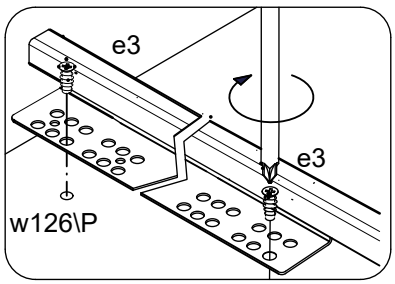

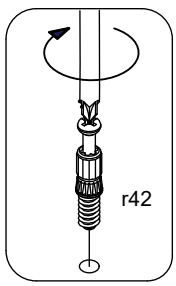

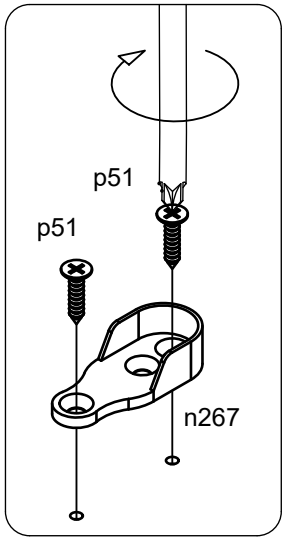

p64		k148\1		p51		f1		r1	
Ø4x40 mm	10x		1x	3.5x15mm	4x	30mm	6x	15x12mm	4x

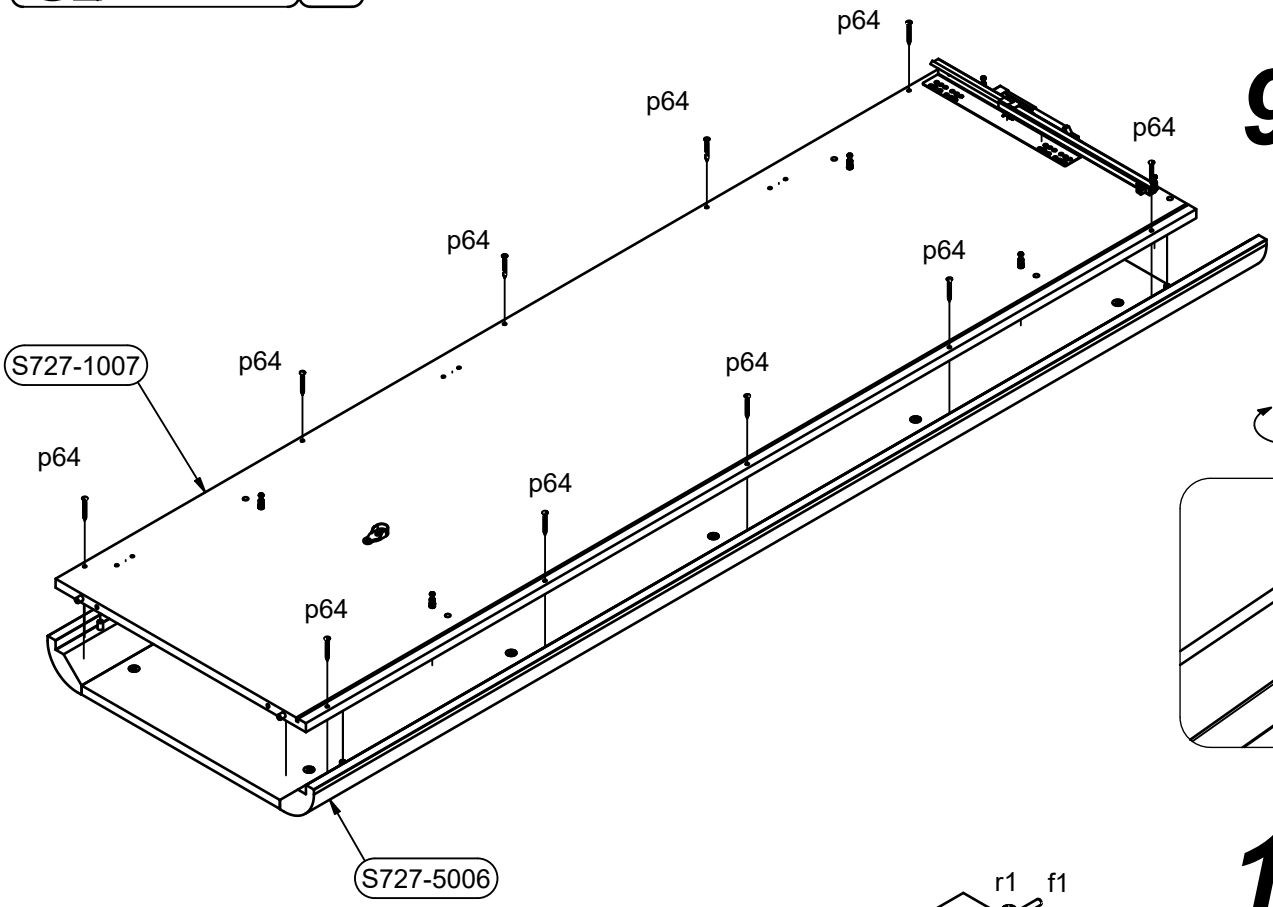

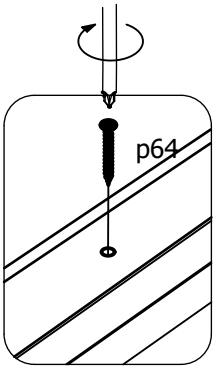

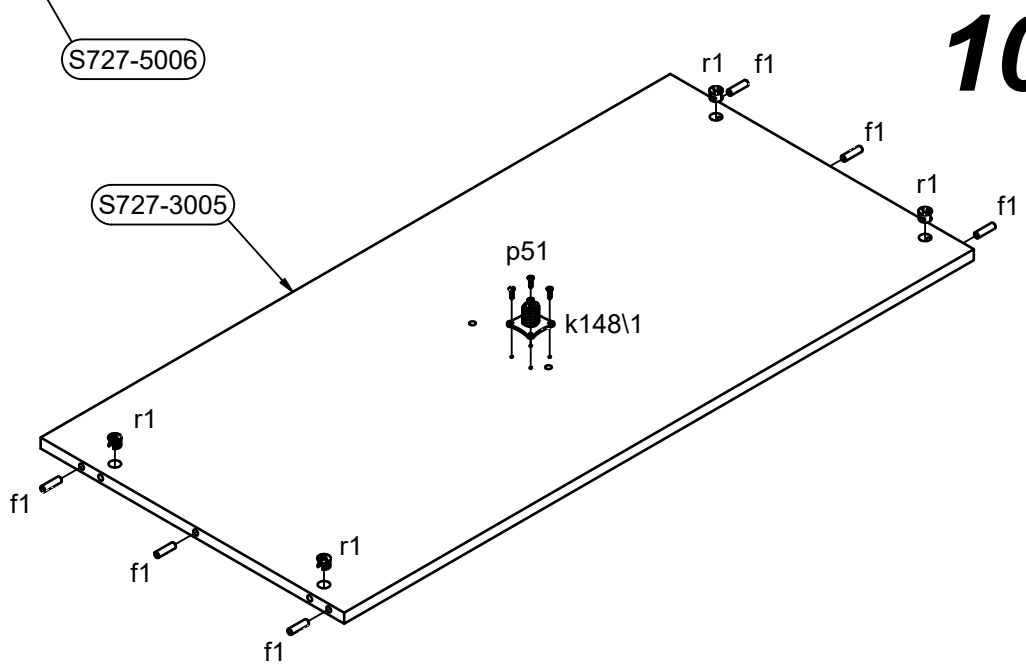

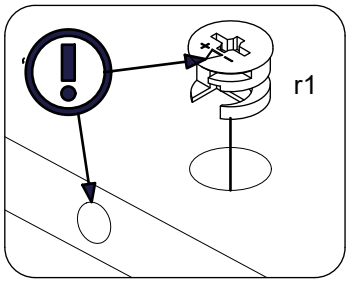

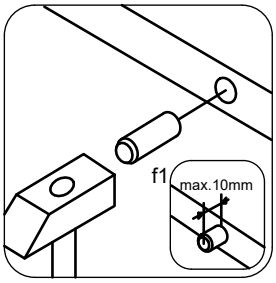

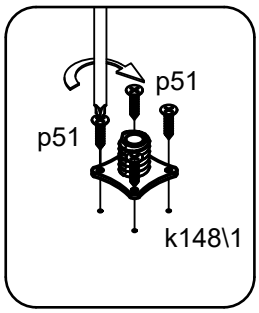

f1 30mm	4x	n267	2x	p51 3.5x15mm	4x	w126\P 450mm	1x
				e3 6x13mm	4x	w126\L 450mm	1x

11

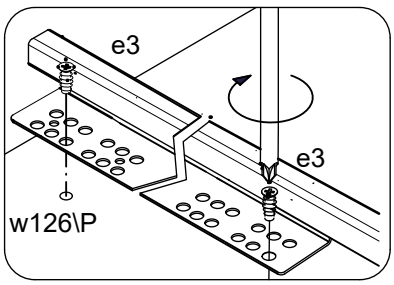

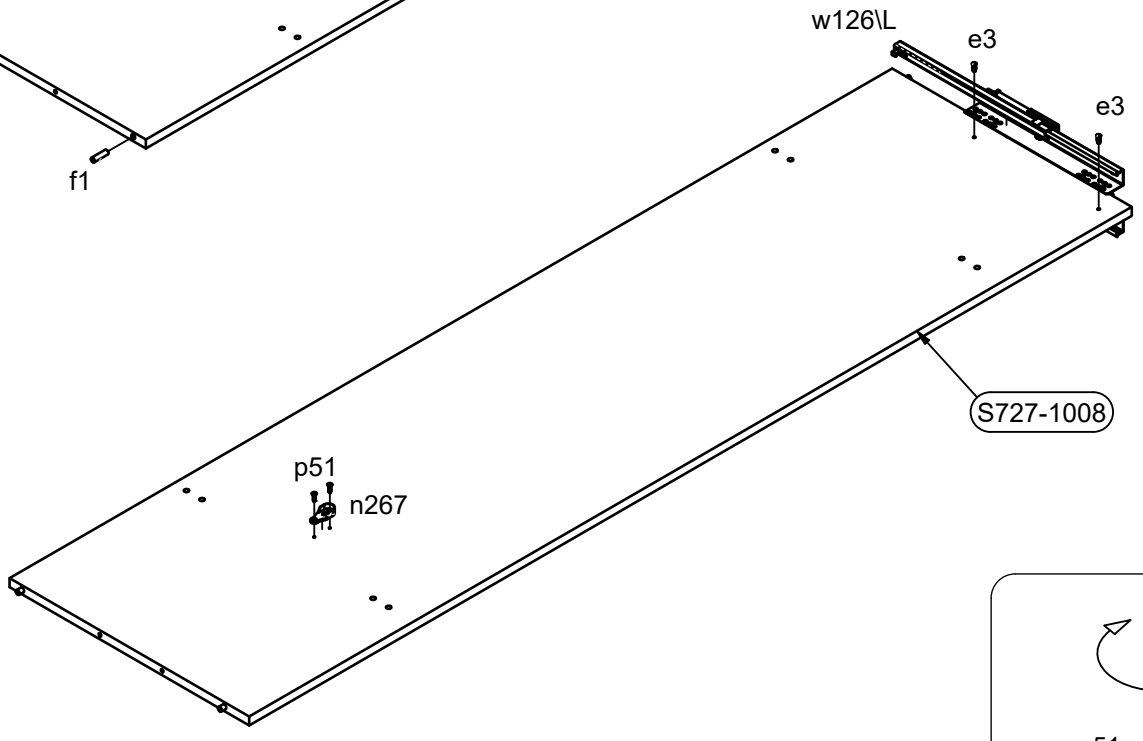

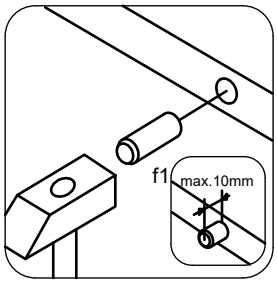

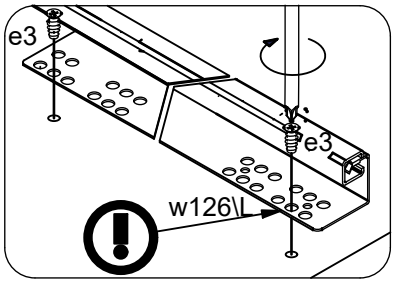

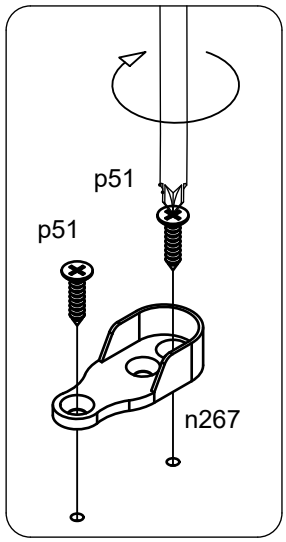

f6		r1		f1		r10	
Ø8x50 mm	4x	15x12mm	16x	30mm	8x		4x

12

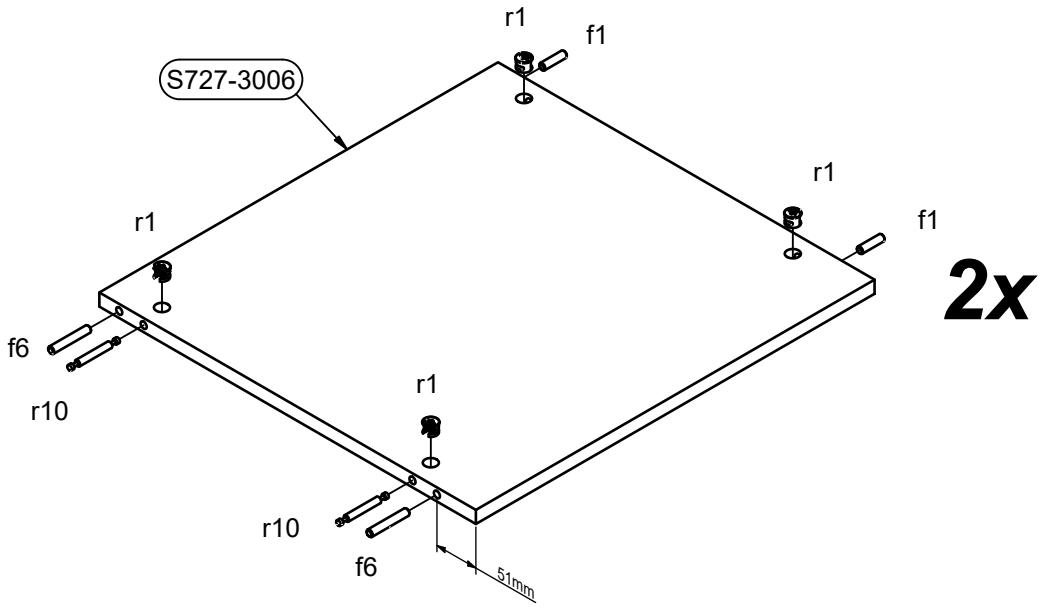

2x

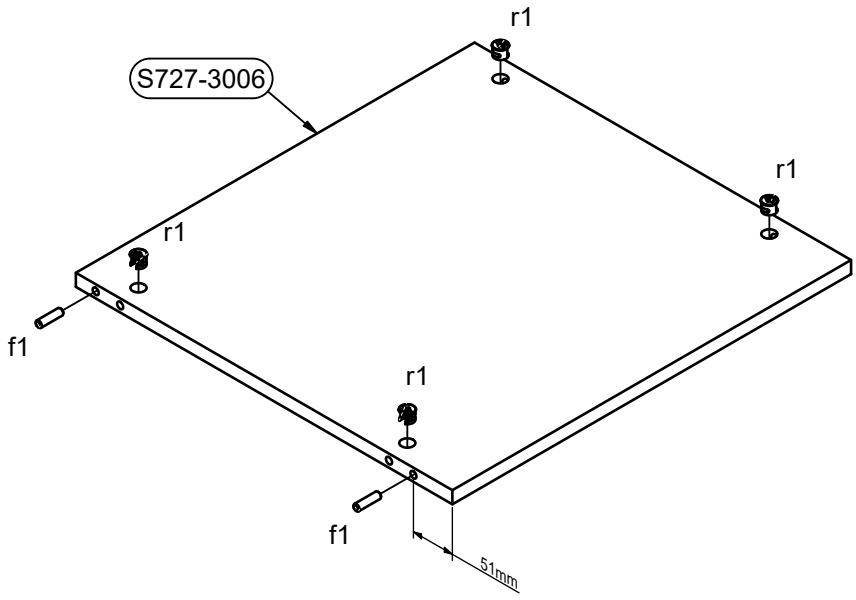

2x

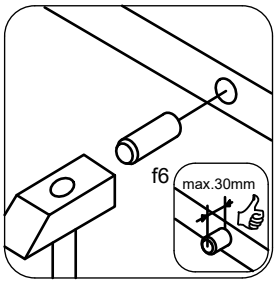

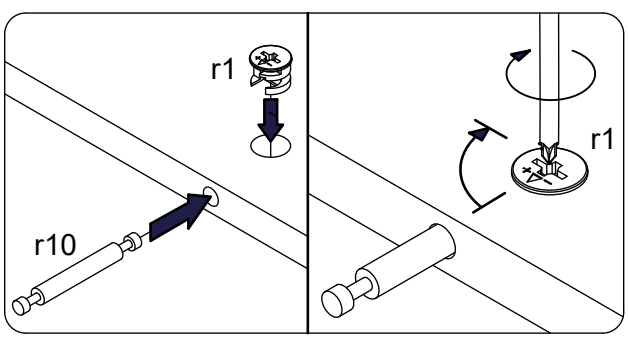

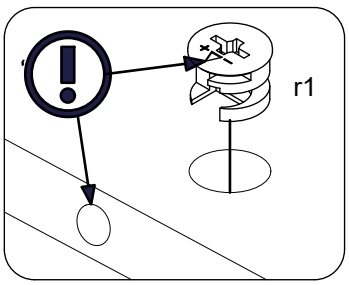

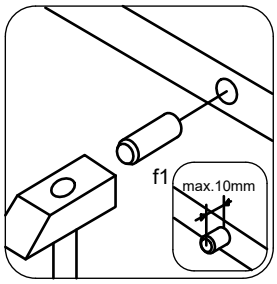

13

a203	4x	a210	2x	p51 3.5x15mm	12x

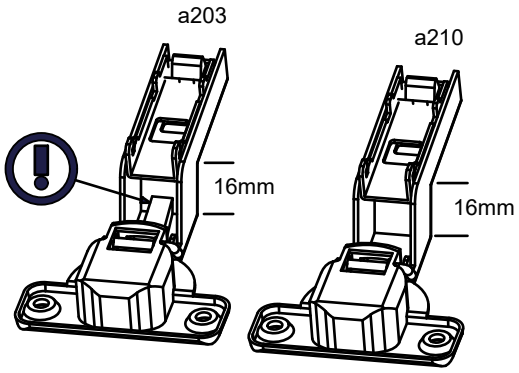

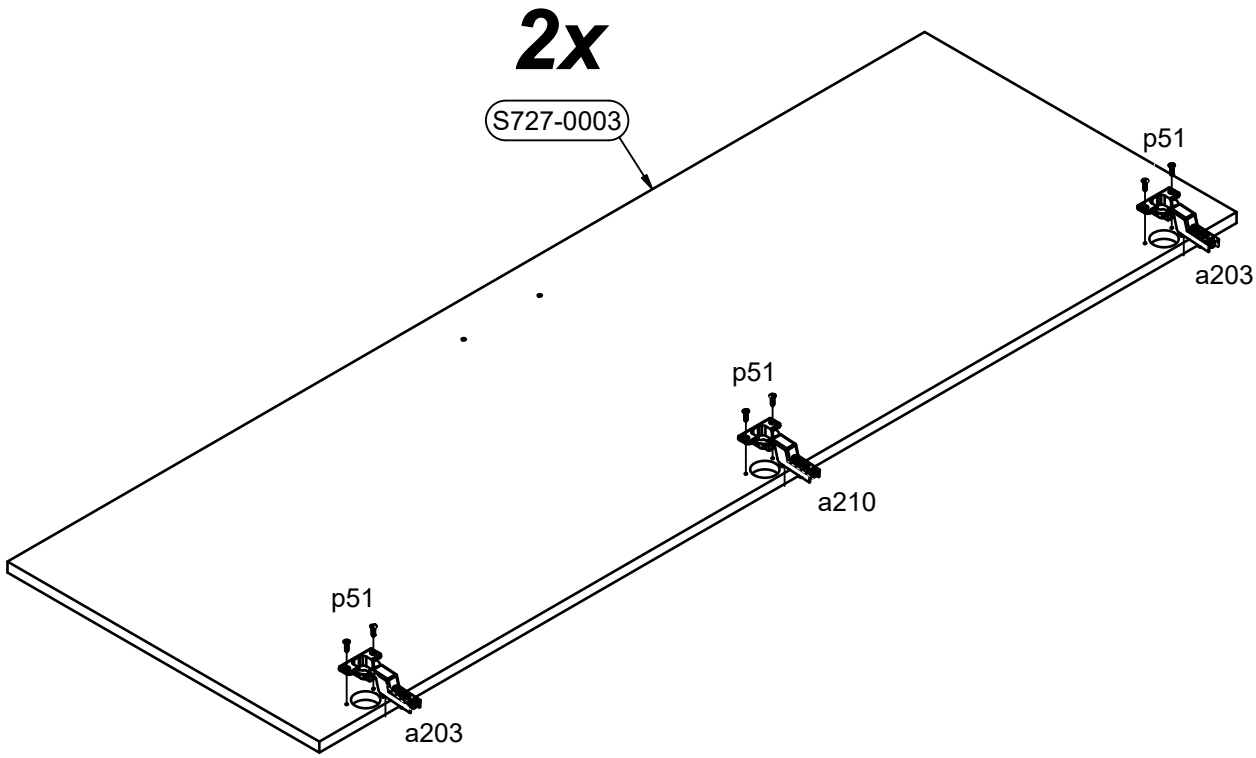

14

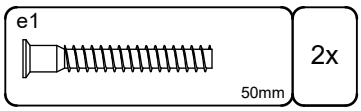
e1
50mm
2x

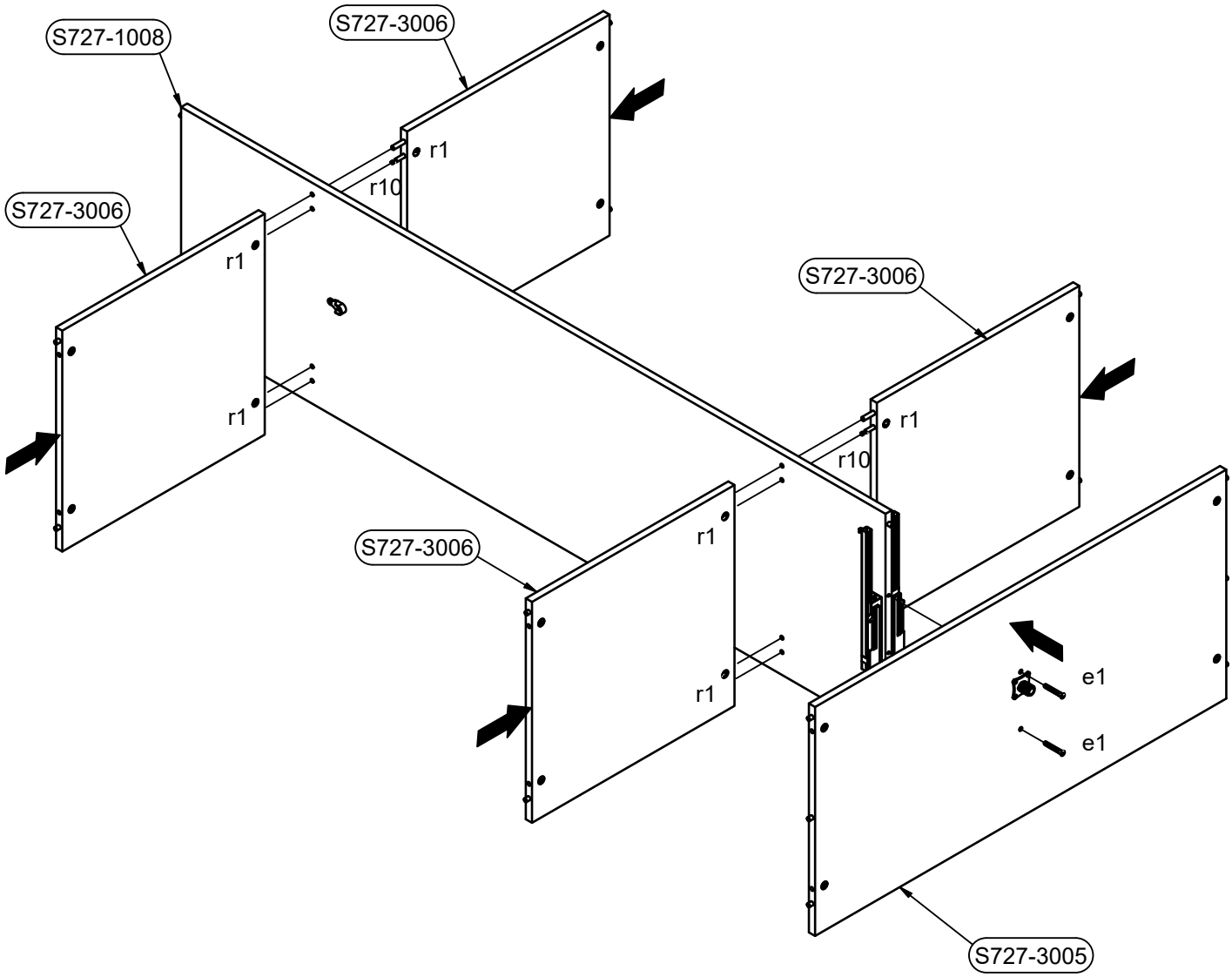
S727-1008
S727-3006
S727-3006
S727-3006
S727-3006
S727-3005
r1
r10
e1
e1

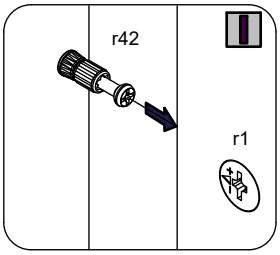
r42
r1

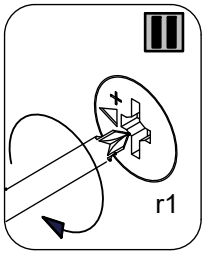
r1

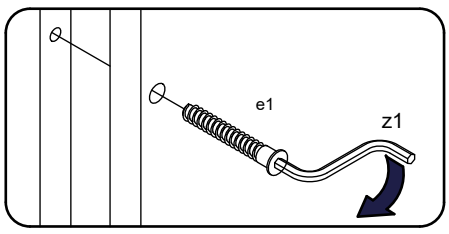
e1
z1

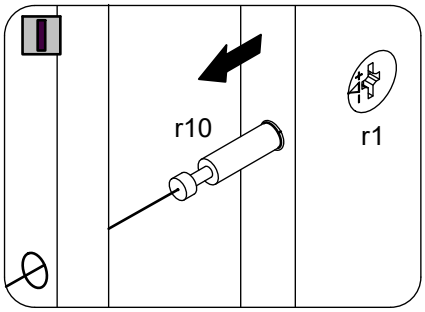
r10
r1

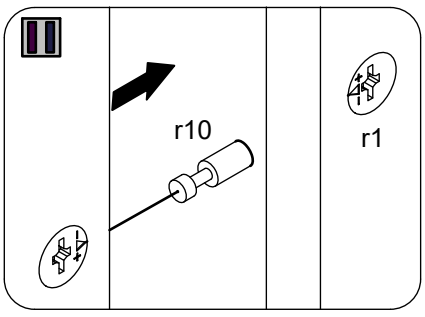
r10
r1

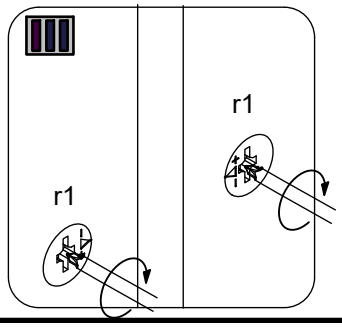
r1
r1

15

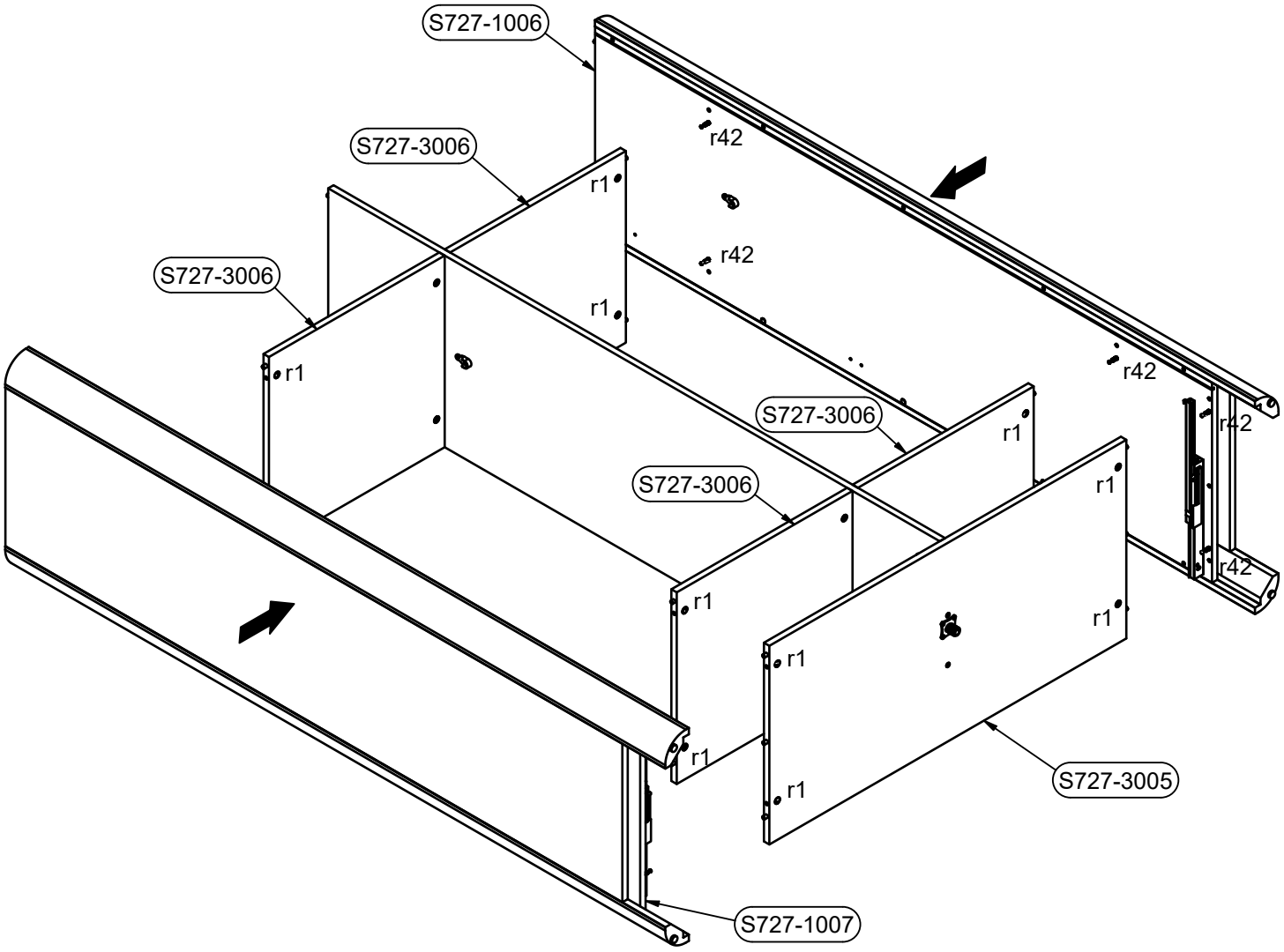
S727-1006
S727-3006
S727-3006
S727-3006
S727-3006
S727-3005
S727-1007
r42
r1

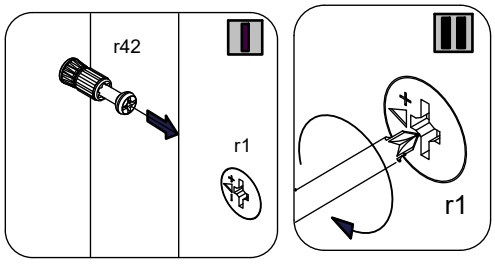
r42
r1
r1

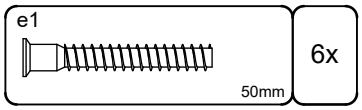

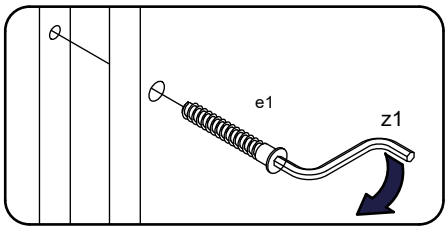

16

17

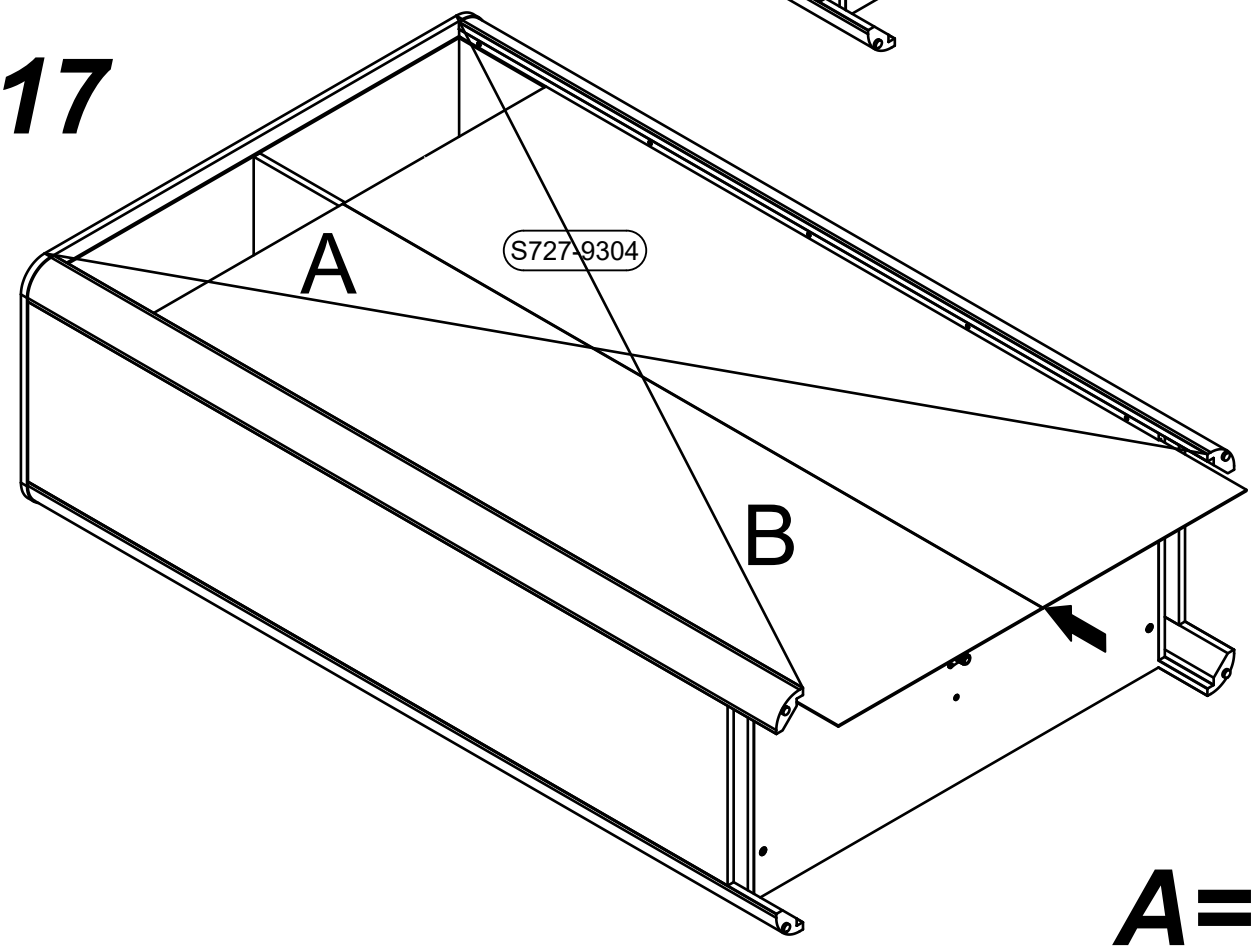

A=B

p55	28x	l2	13x	k148\6	1x
2.9x16mm					

18

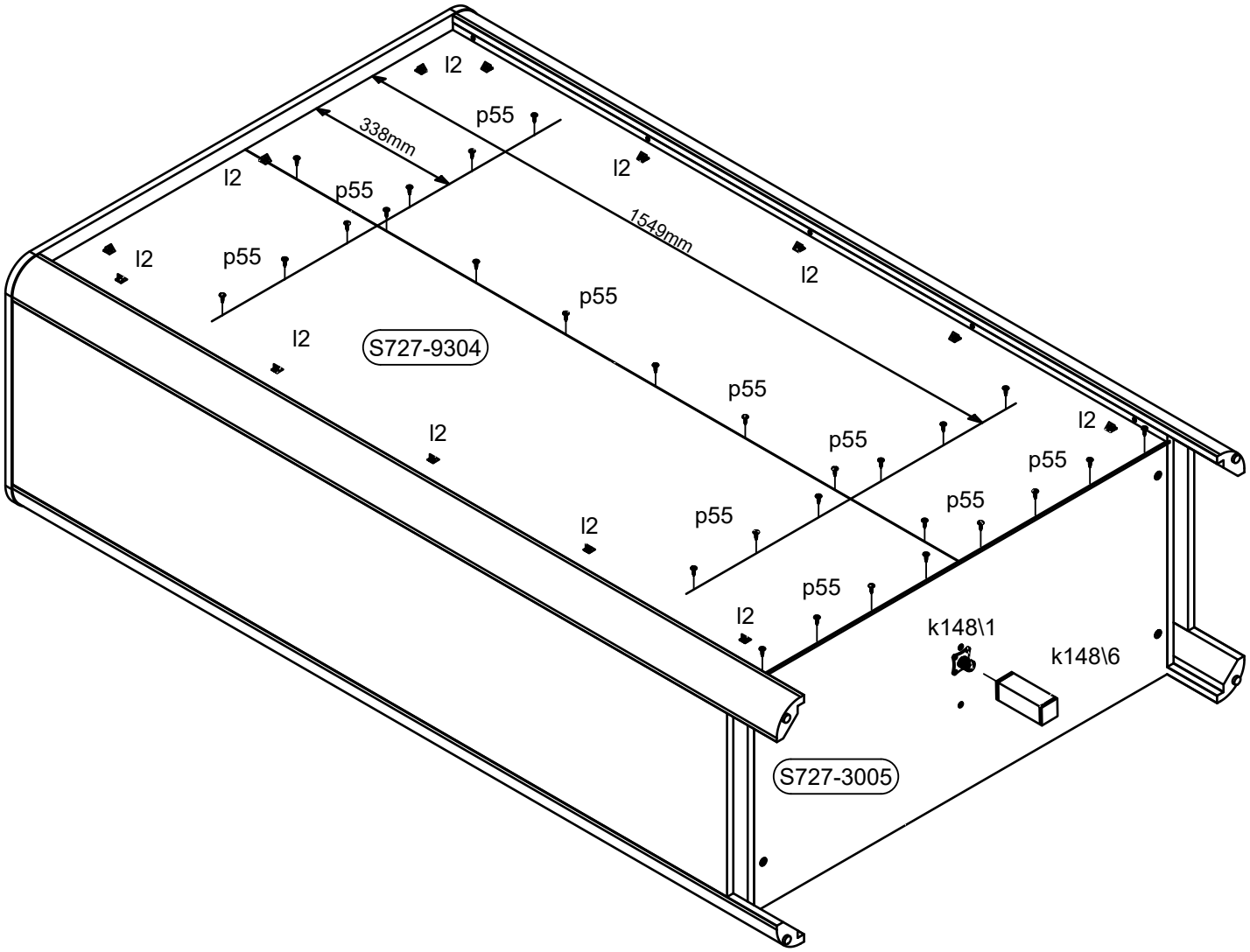

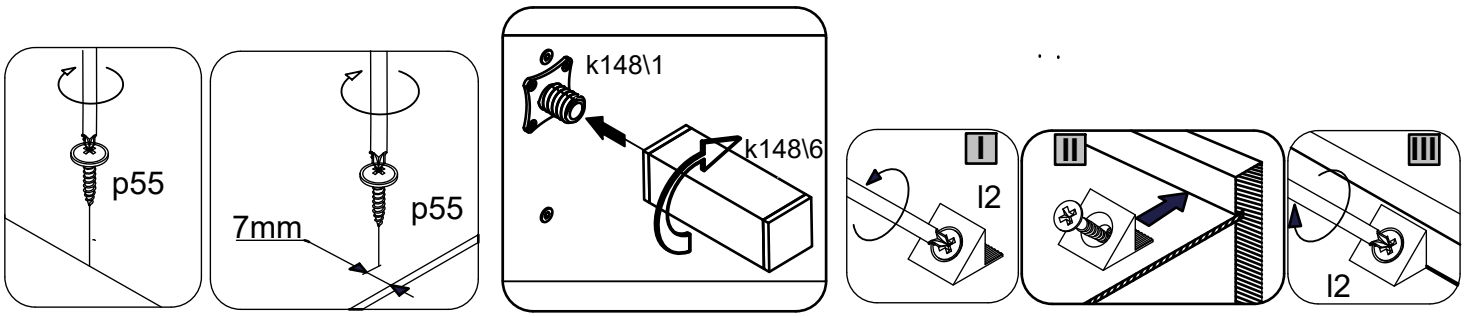

19

b90 6x

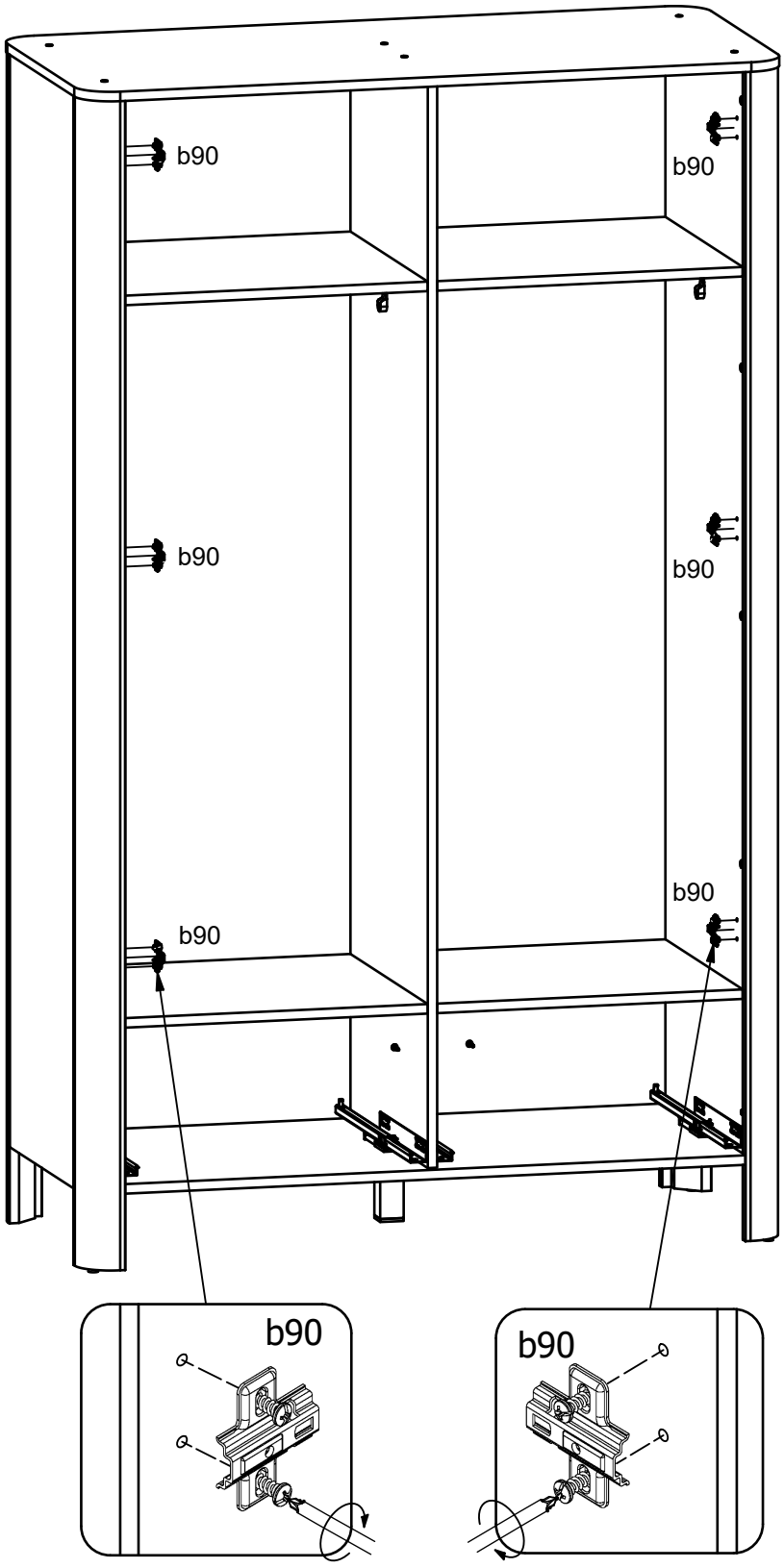

r42	4x	f25 6.5x40 mm	8x	f1 30mm	8x	r15 12x10,5mm	4x

20

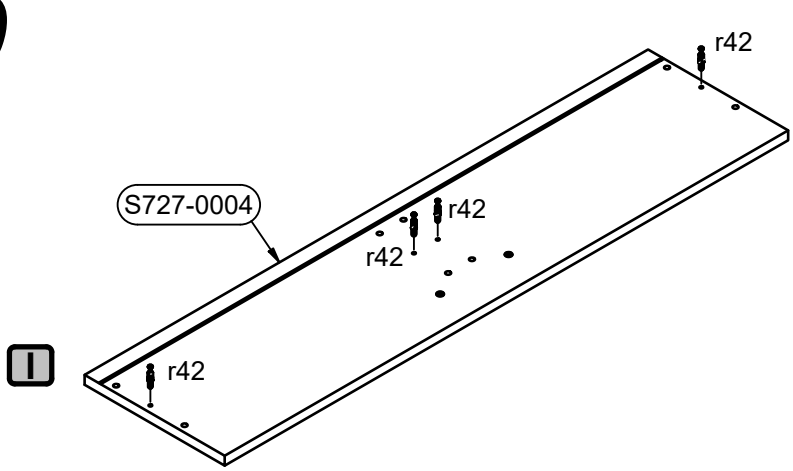

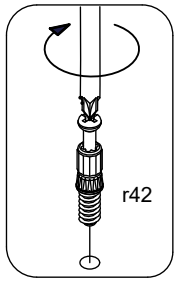

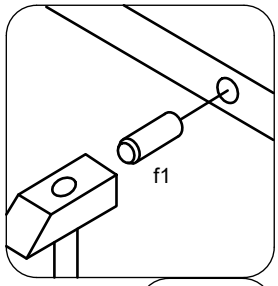

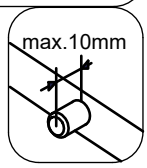

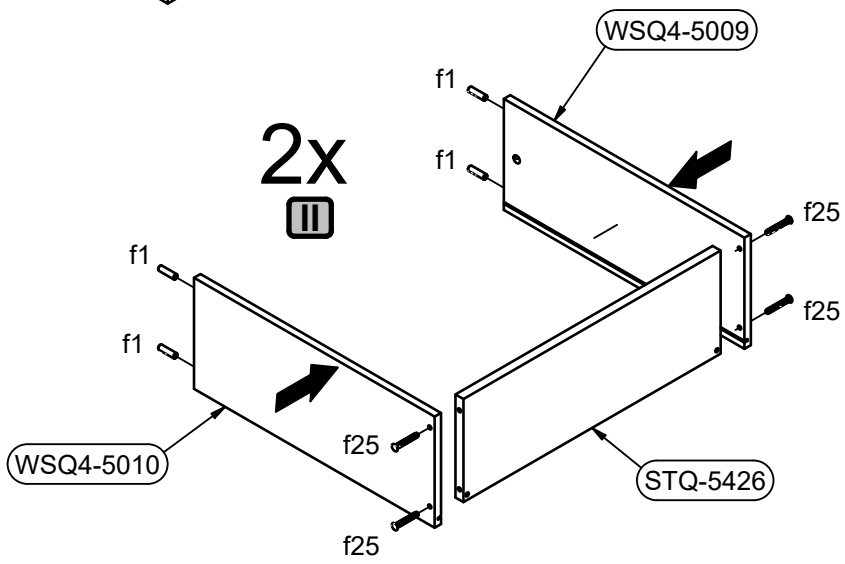

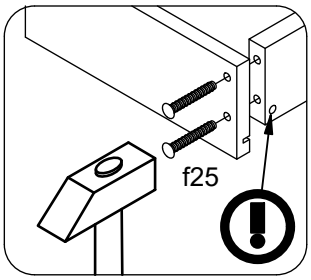

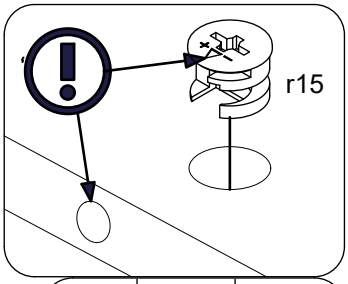

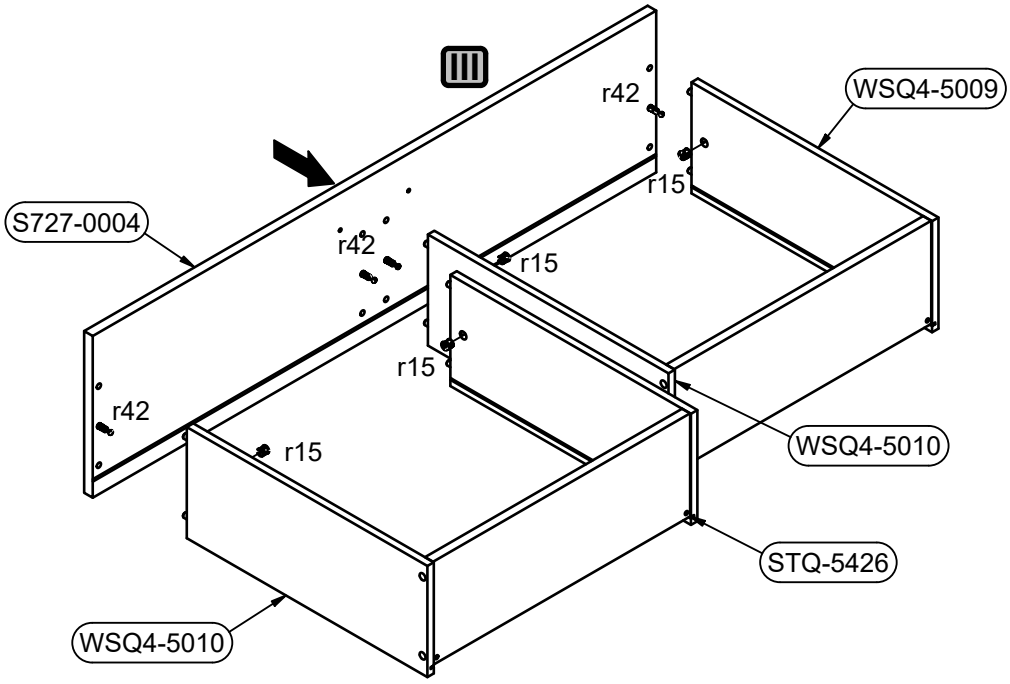

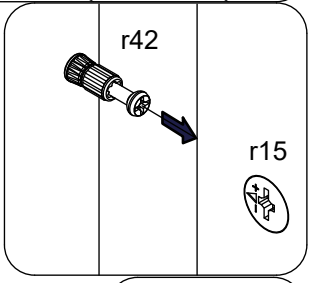

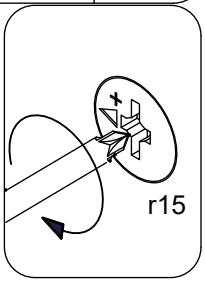

p87	2x	c666	1x	p55	10x
Ø4x25 mm		L140/128mm		2.8x16mm	

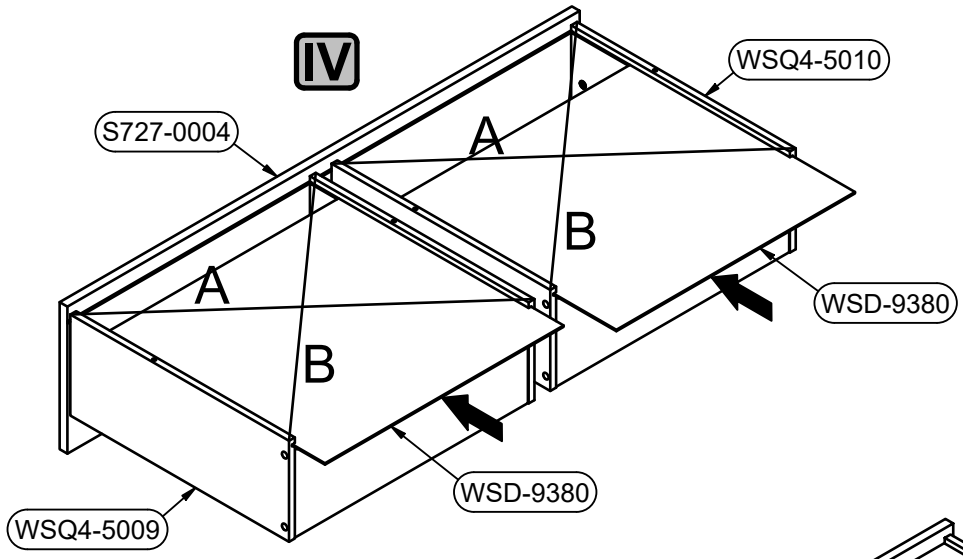

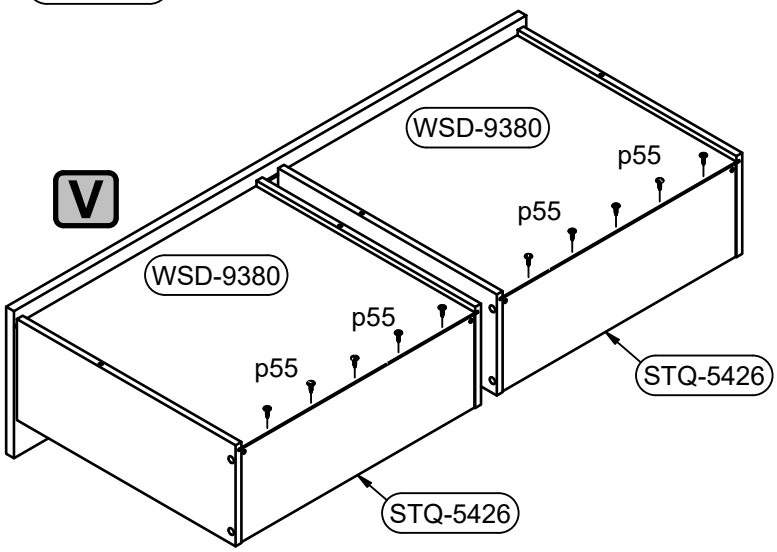

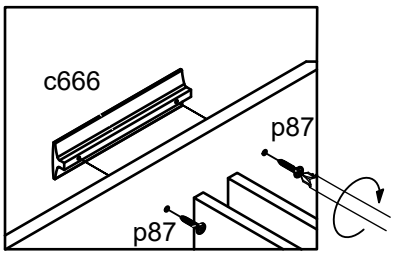

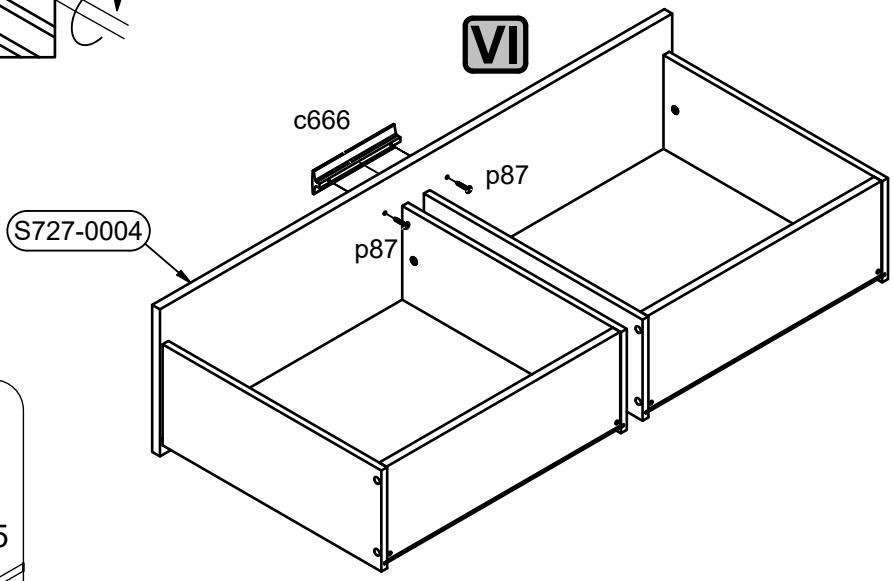

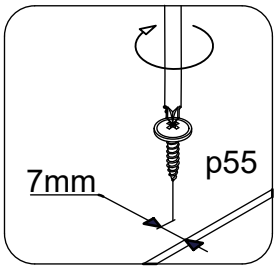

21

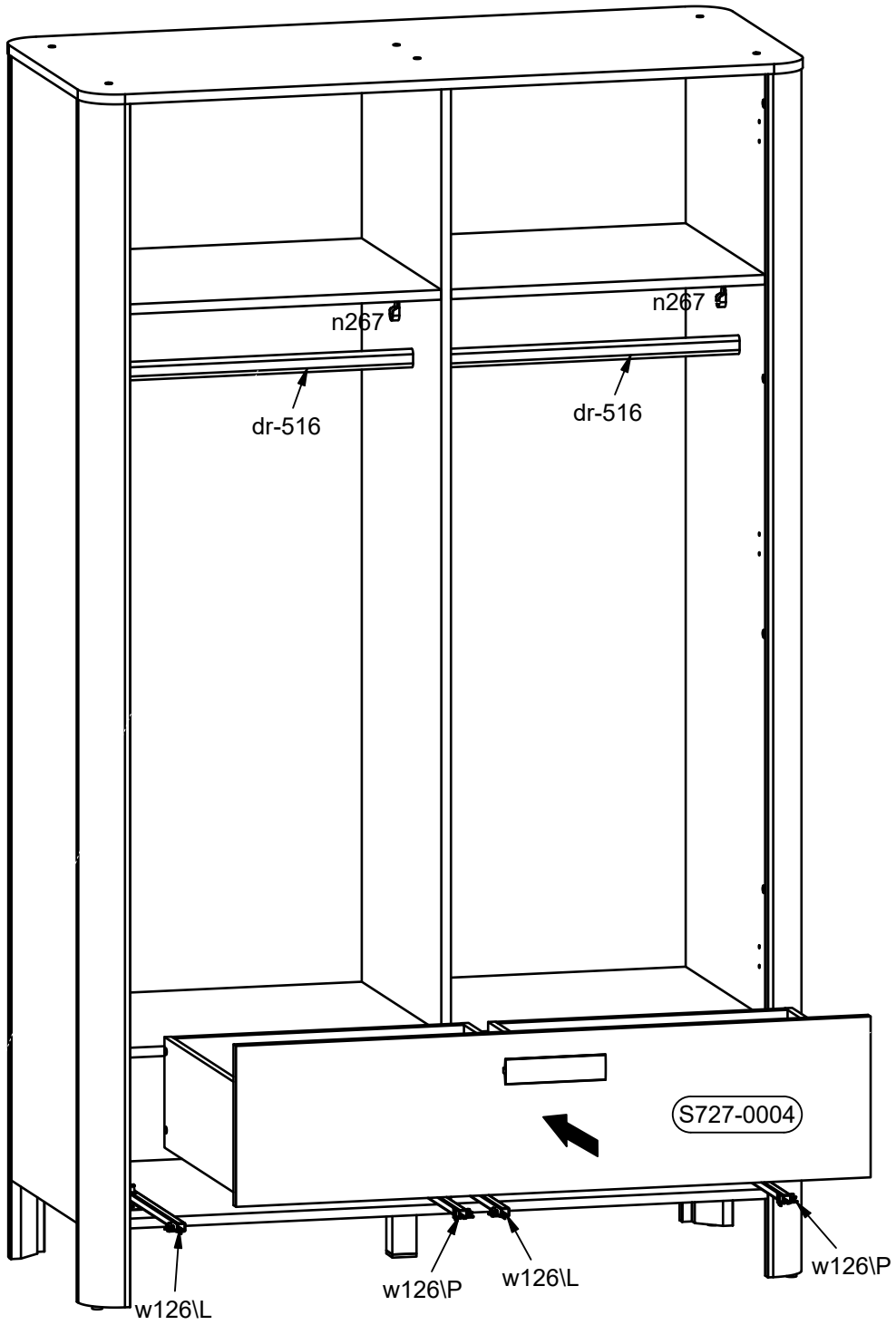
n267
n267
dr-516
dr-516
S727-0004
w126\L
w126\P
w126\L
w126\P

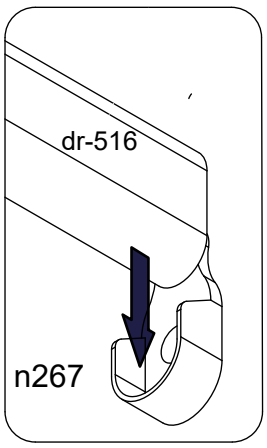
dr-516
n267

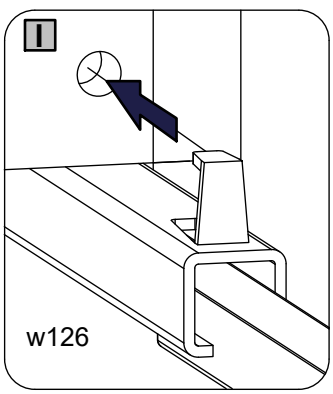
I
w126

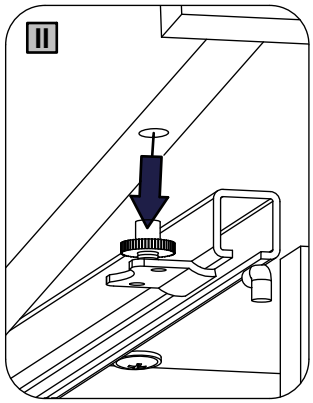
II

22

p87 Ø4x25 mm 2x

c666 L140/128mm 2x

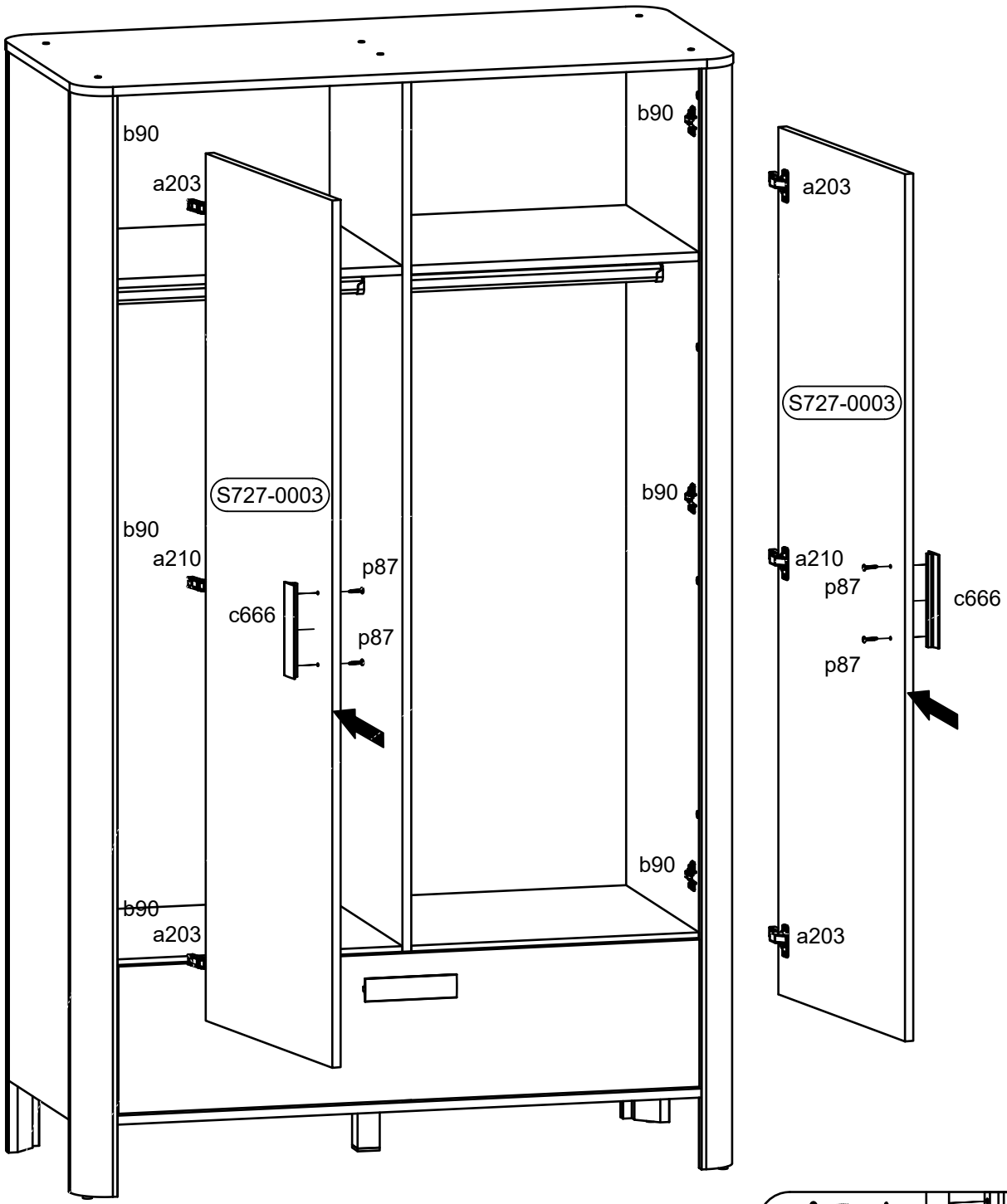

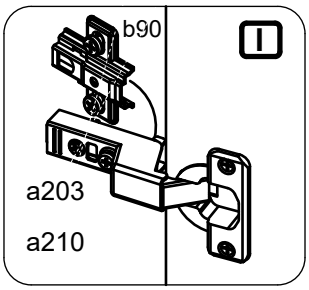

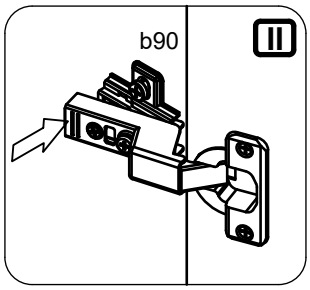

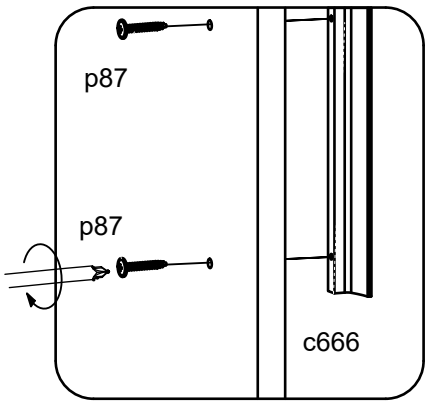

23

p51 3.5x15mm	2x
n14\2	1x

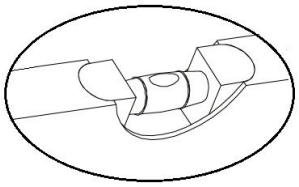

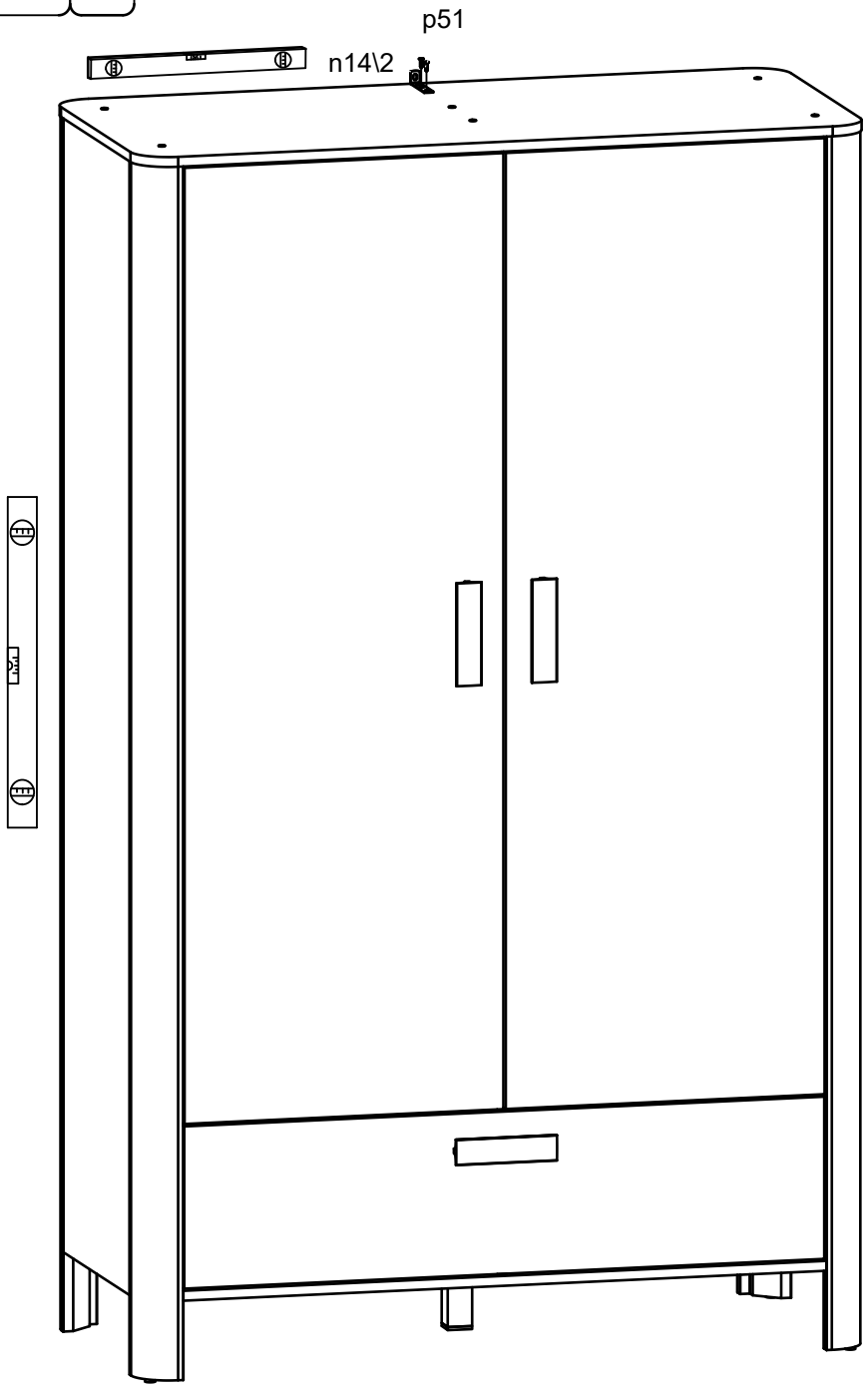

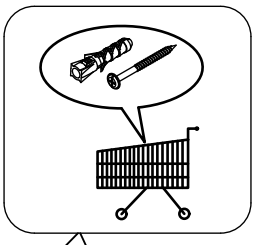

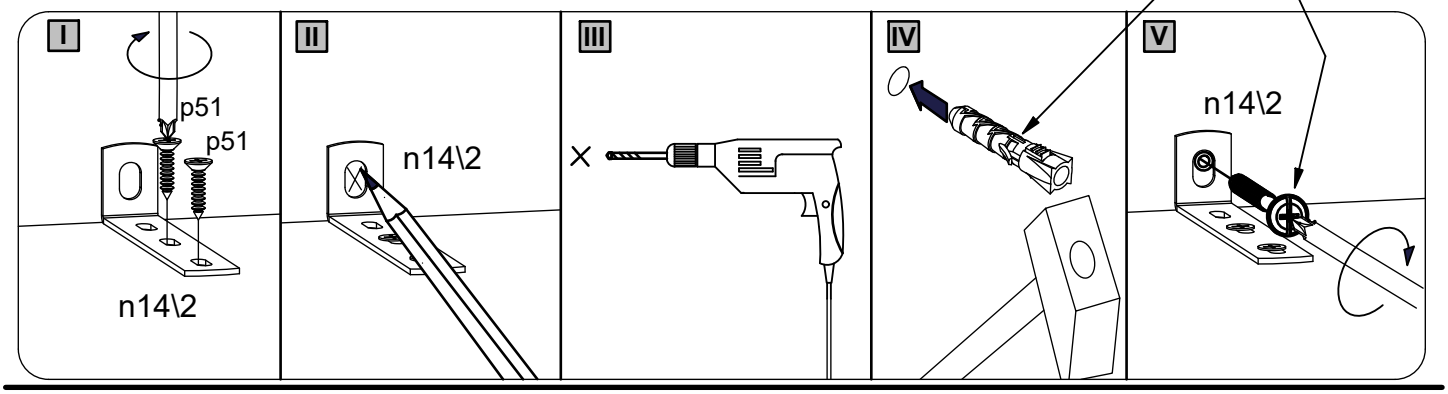

24

s59 Ø14mm	8x	
s68 Ø20mm	8x	
p55 2.8x16mm	2x	

