

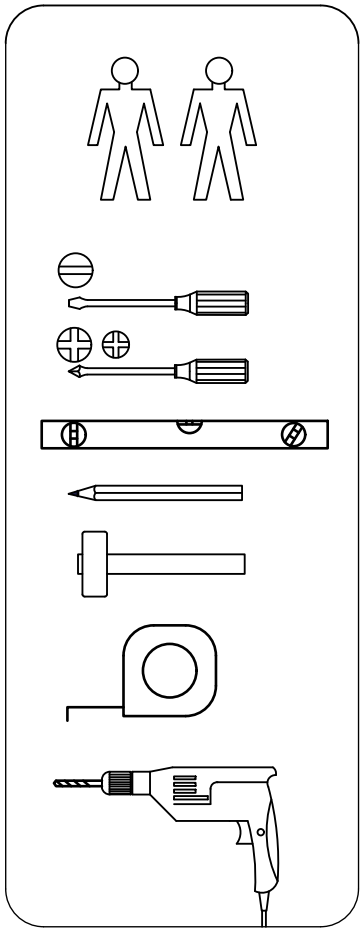

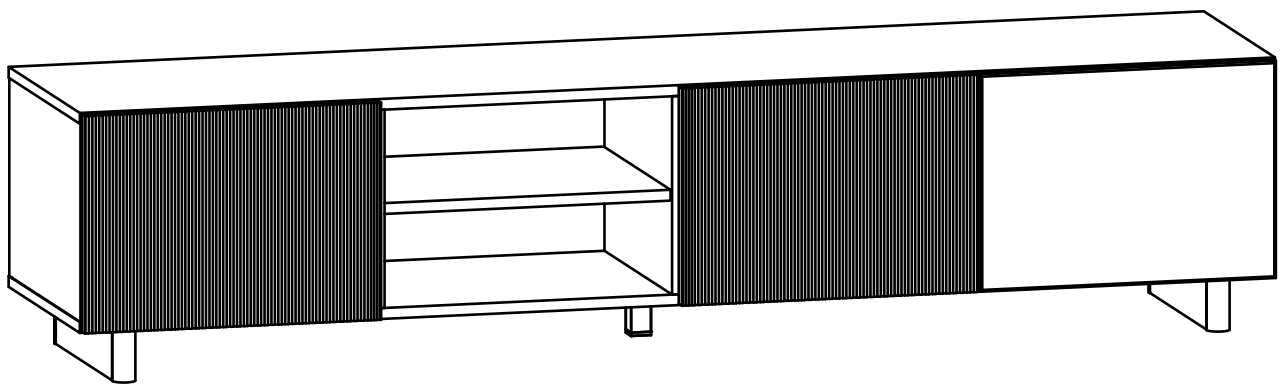


90min

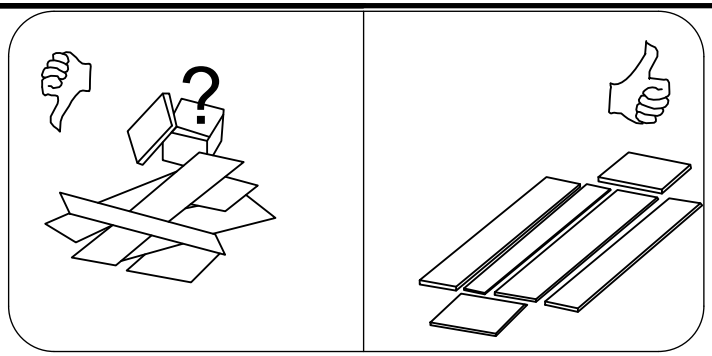

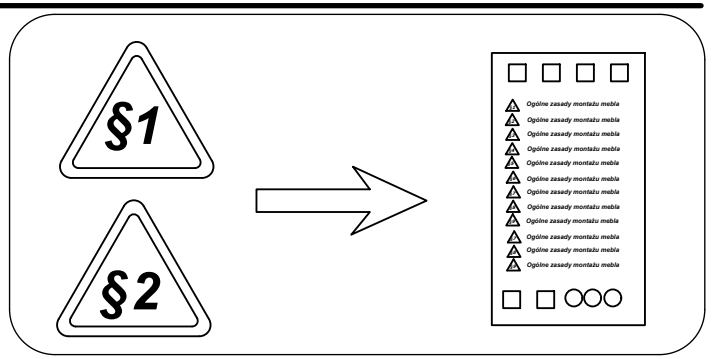
§1
§2
Ogólne zasady montażu mebla

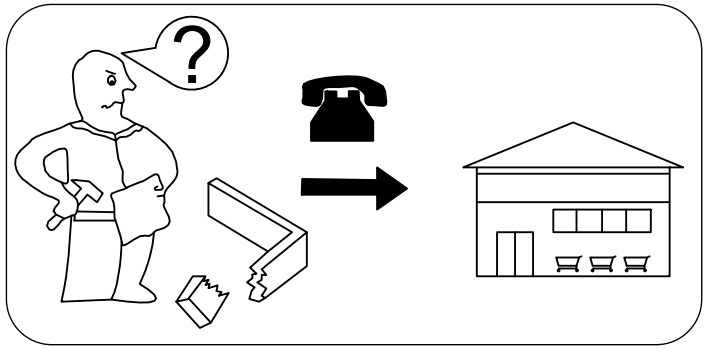

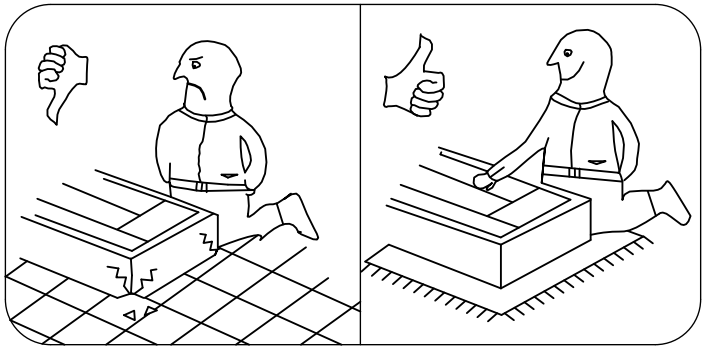

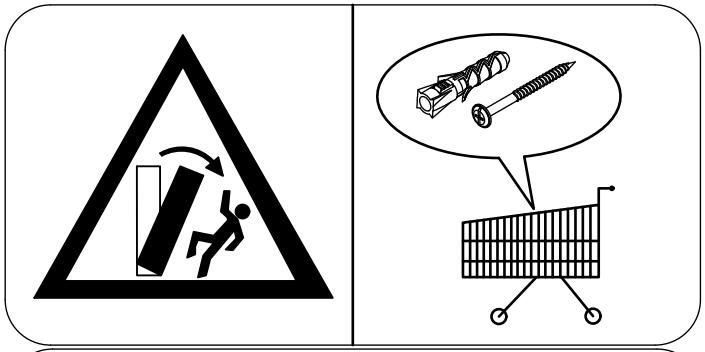

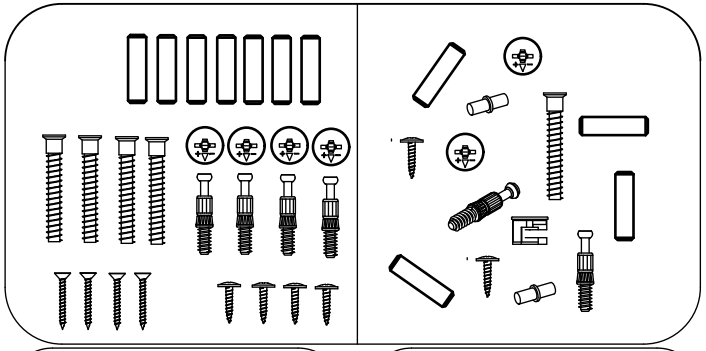

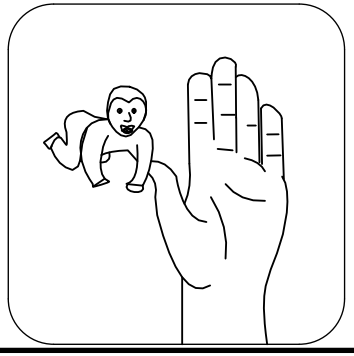

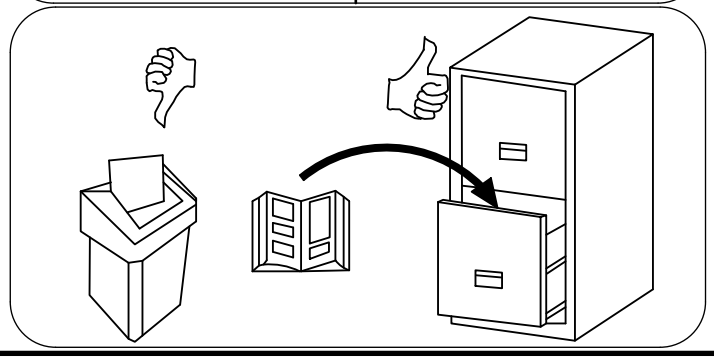

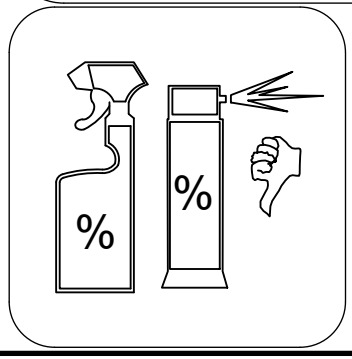
%
%

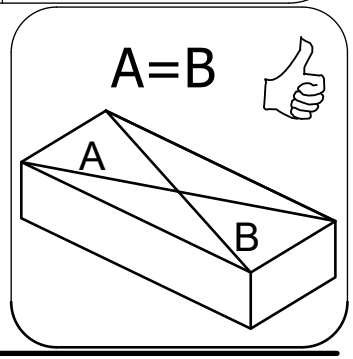
A=B
A
B

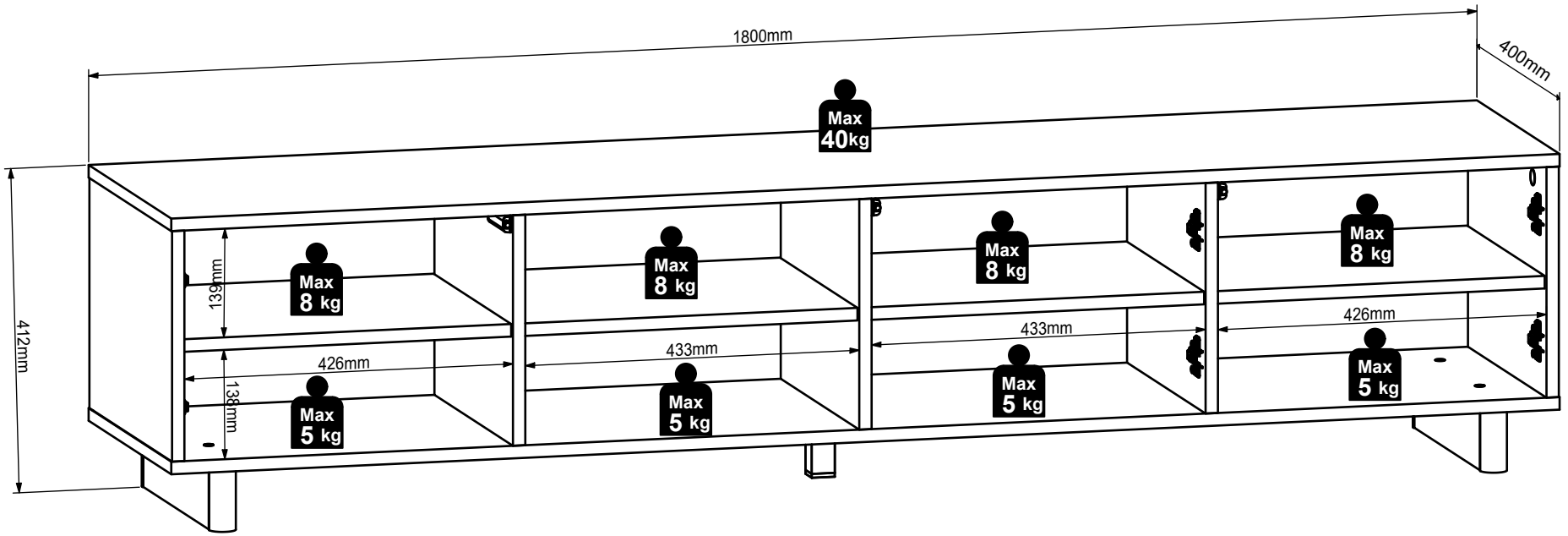
1800mm
400mm
Max
40kg
412mm
139mm
138mm
426mm
433mm
Max
8 kg
Max
5 kg

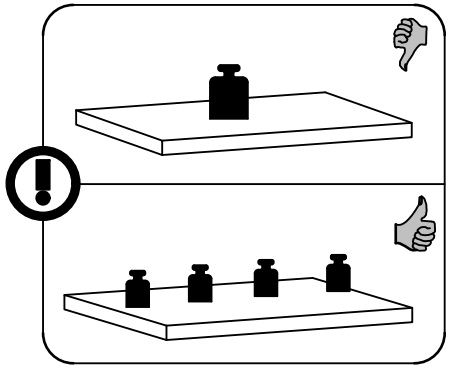

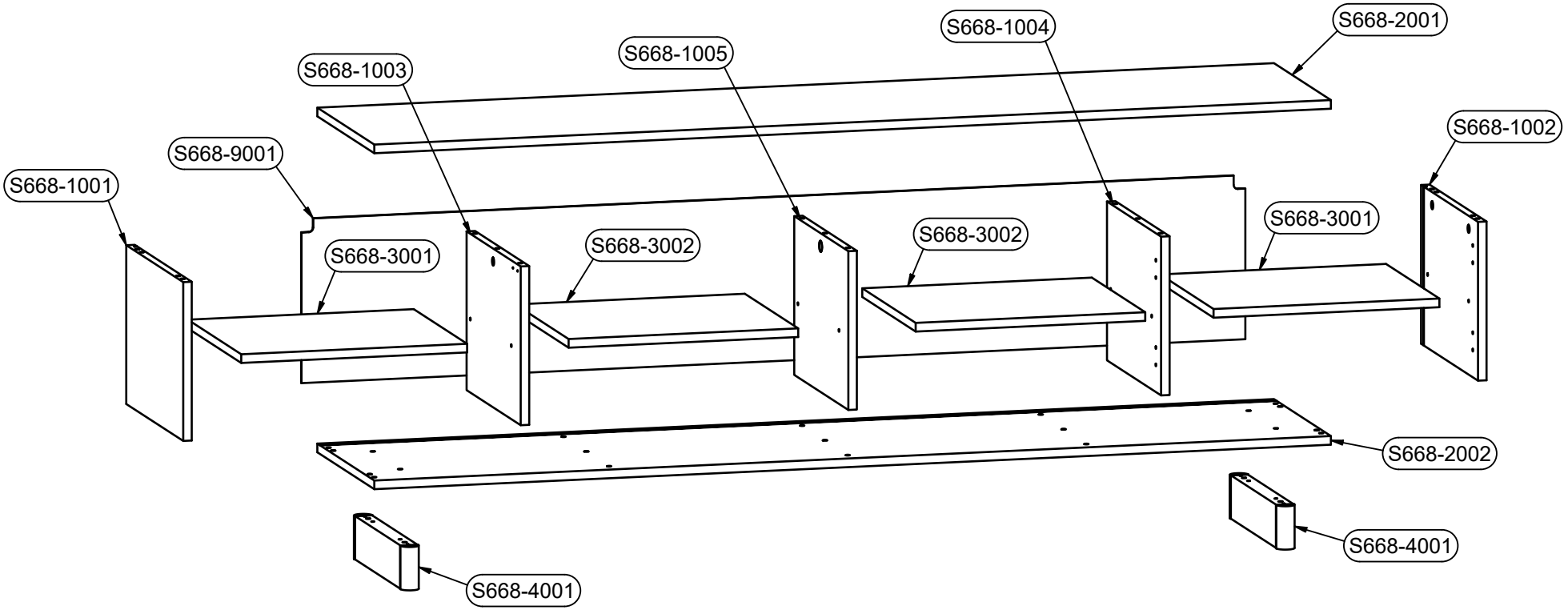

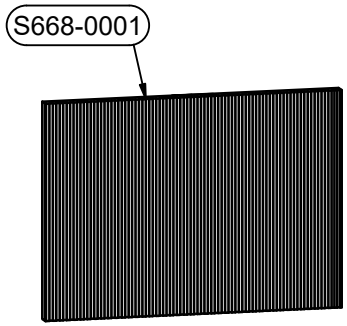

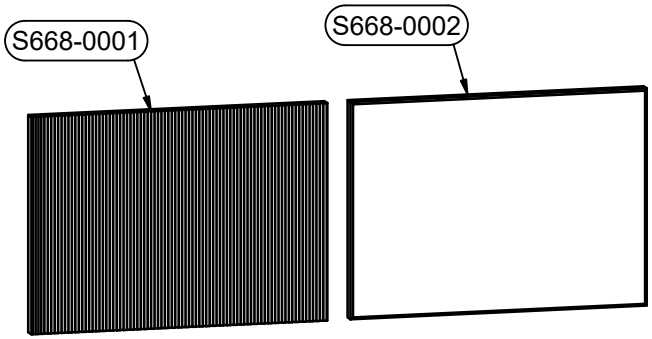

B1	B2	C1	C2	C3	C4	D
S668-0001	-	321	446	18	2	1/2
S668-0002	-	321	446	19	1	1/2
S668-1001	-	293	400	16	1	2/2
S668-1002	-	293	400	16	1	2/2
S668-1003	-	293	380	16	1	2/2
S668-1004	-	293	380	16	1	2/2
S668-1005	-	293	380	16	1	2/2
S668-2001	-	1800	400	16	1	2/2
S668-2002	-	1800	400	16	1	2/2
S668-3001	-	425	375	16	2	1/2
S668-3002	-	432	375	16	2	1/2
S668-4001	-	80	358	34	2	1/2
S668-9001	-	1776	303	2,5	1	2/2

cm
0 1 2 3 4 5 6 7 8 9 10

1:1

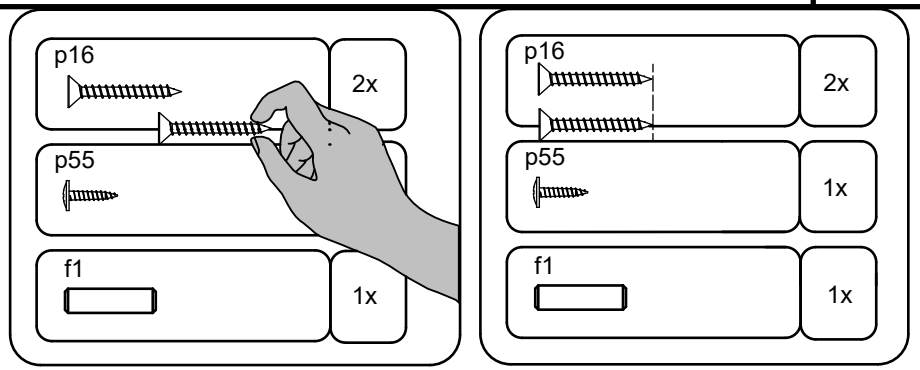

e1 50mm	11x	f1 30mm	24x	p51 3.5x15mm	26x
p55 2.8x16mm	6x	r1 15mm 12mm 15x12mm	7x	r42	7x

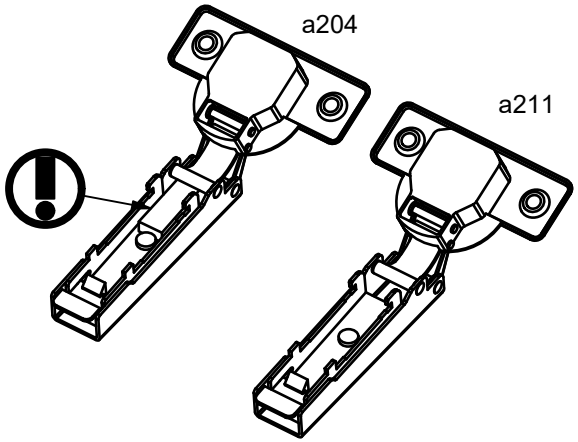

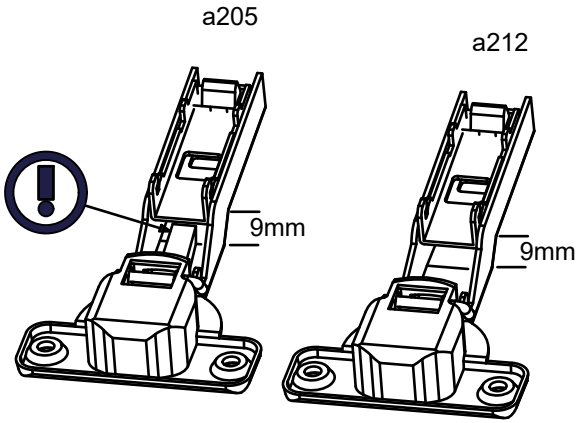

1:1

a204 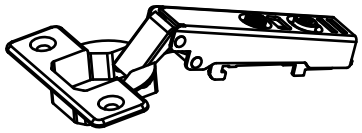	2x	a205 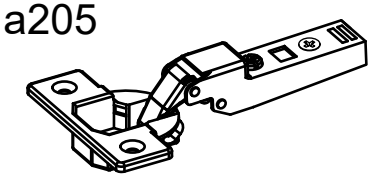	1x
a212 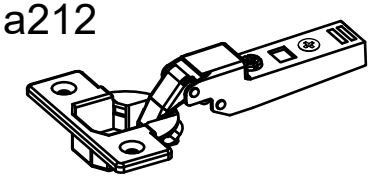	1x	a211 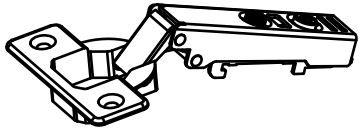	2x	b90 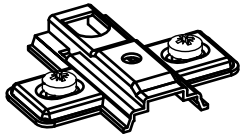	6x
d1 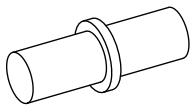 fi5mm	16x	k1 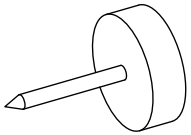	4x	k38\3 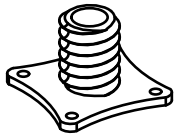	1x
k38\10 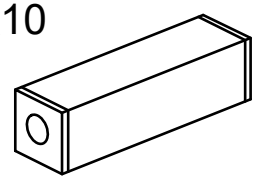	1x	l2 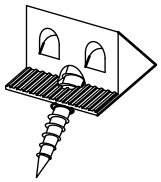	10x	n14\2 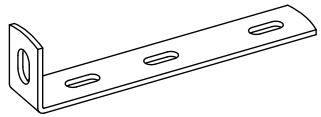	2x
s59 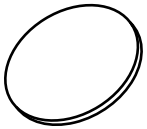 Ø14mm	4x	s68 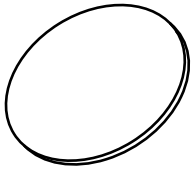 Ø20mm	7x	z50\1 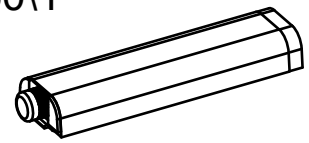	3x
z50\2 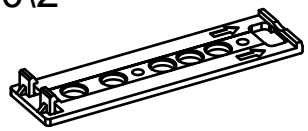	3x	z1 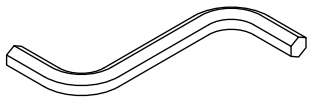  4mm	1x		

1 §2

r1 15x12mm	4x	d1 fi5mm	4x	f1 30mm	8x	b90	4x

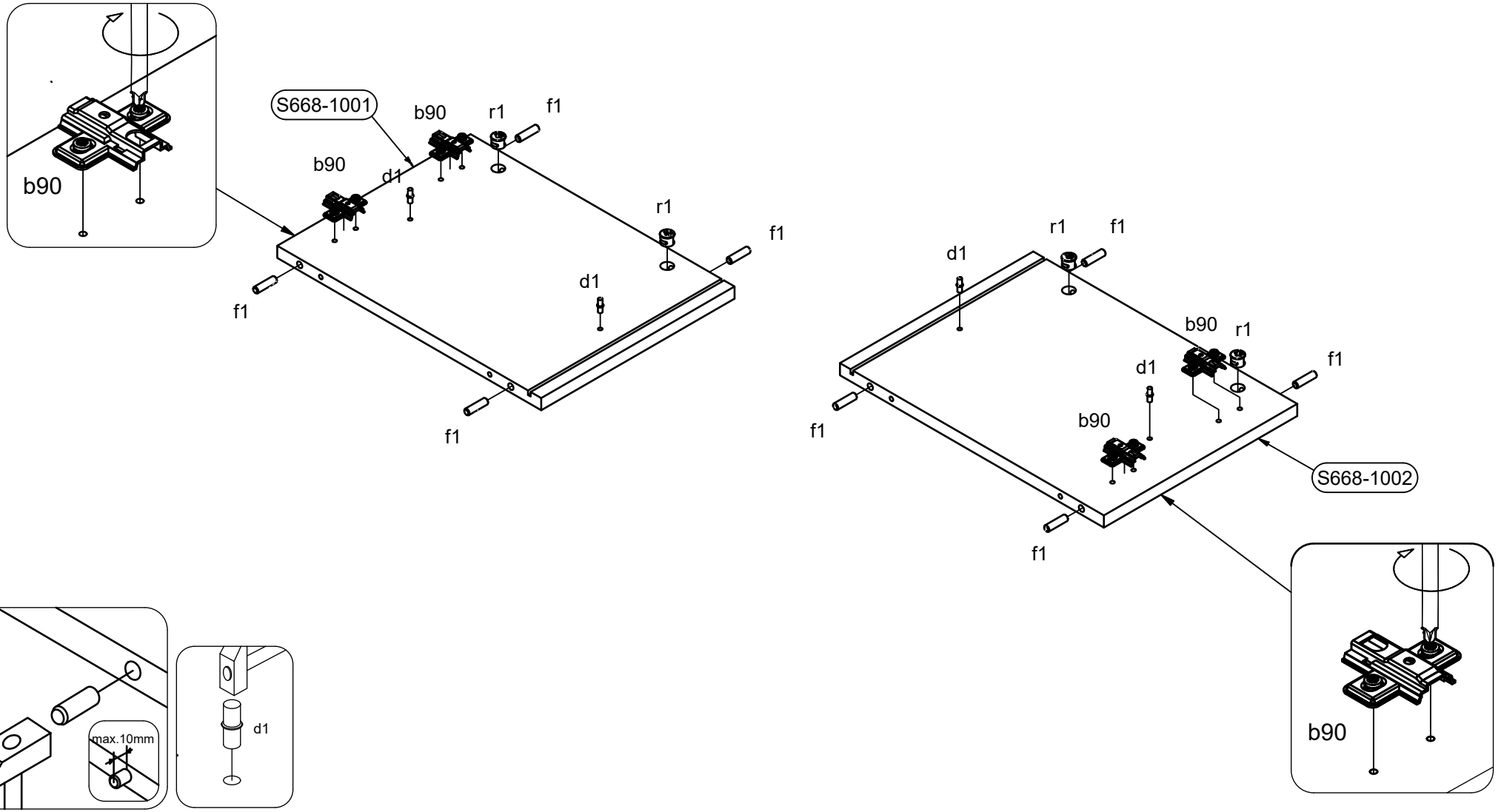

z50\1	2x	z50\2	2x	d1 fi5mm	8x	p51 3.5x15mm	4x	r1 15x12mm	2x	f1 30mm	8x

2

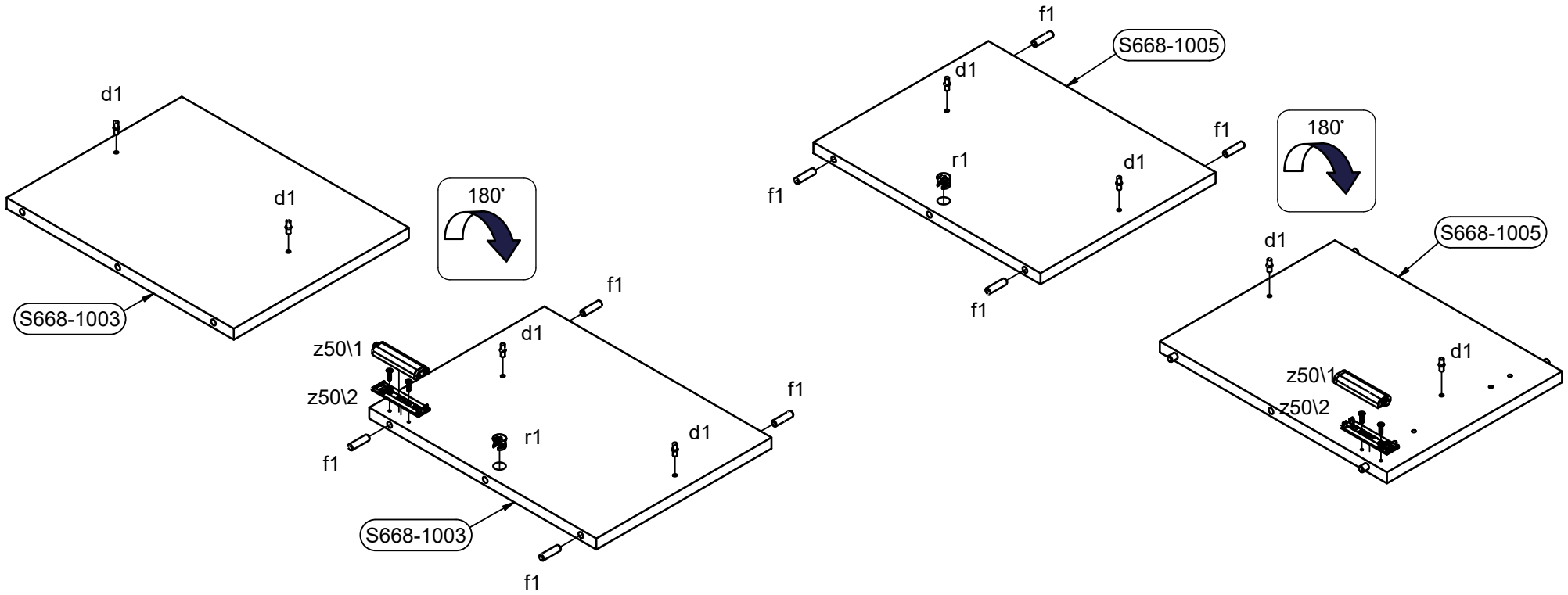

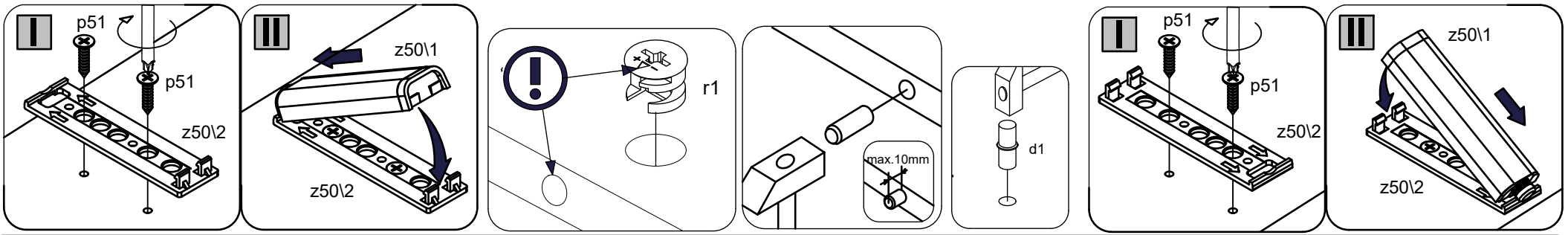

b90	2x	z50\1	1x	z50\2	1x	d1 fi5mm	4x	f1 30mm	4x	r1 15x12mm	1x
r42	7x	p51 3.5x15mm	2x								

3

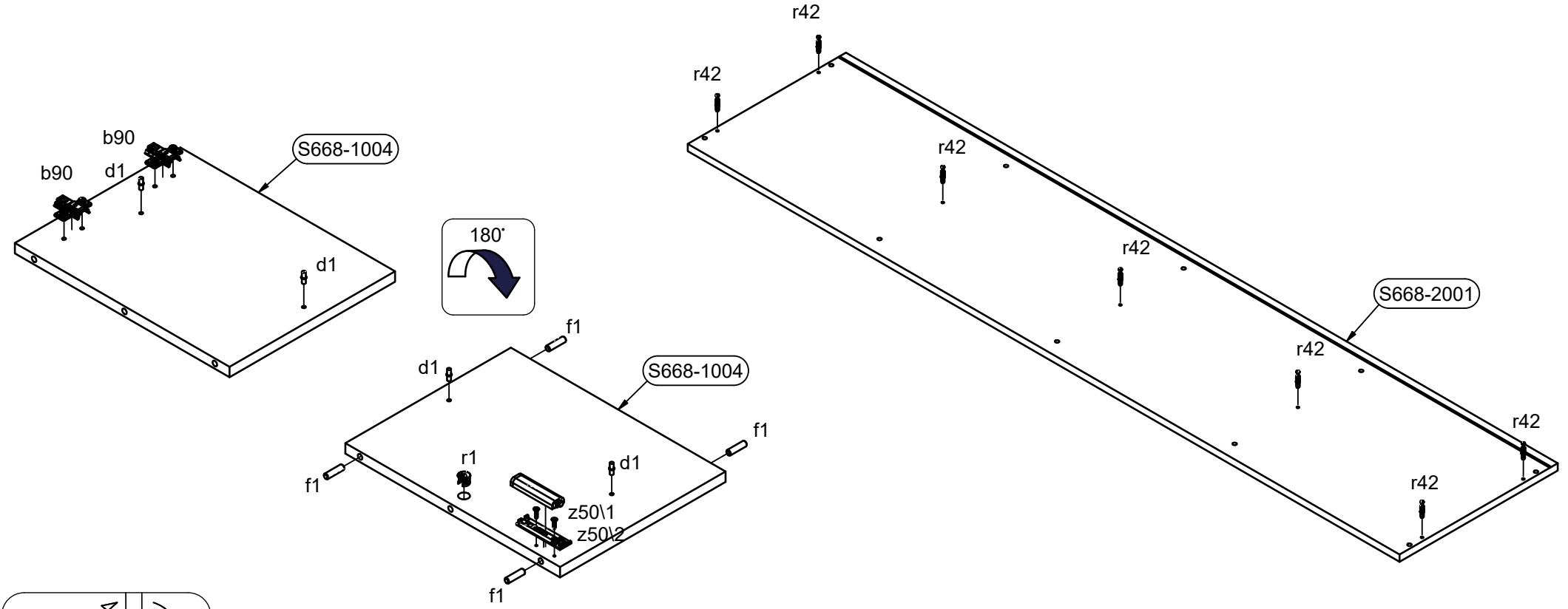

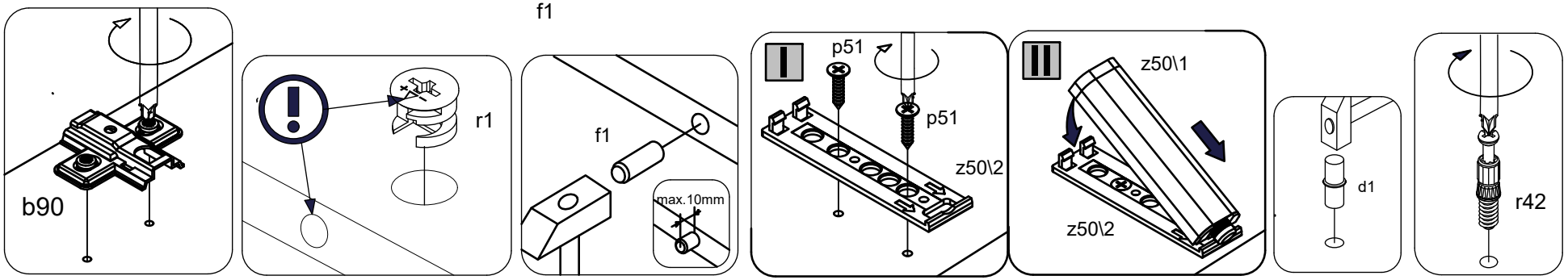

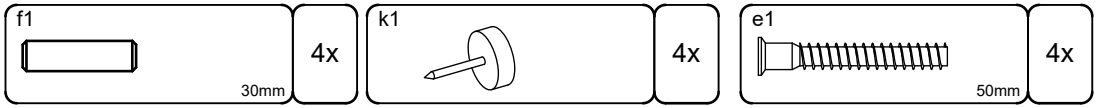
f1
30mm
4x
k1
4x
e1
50mm
4x

4

2x

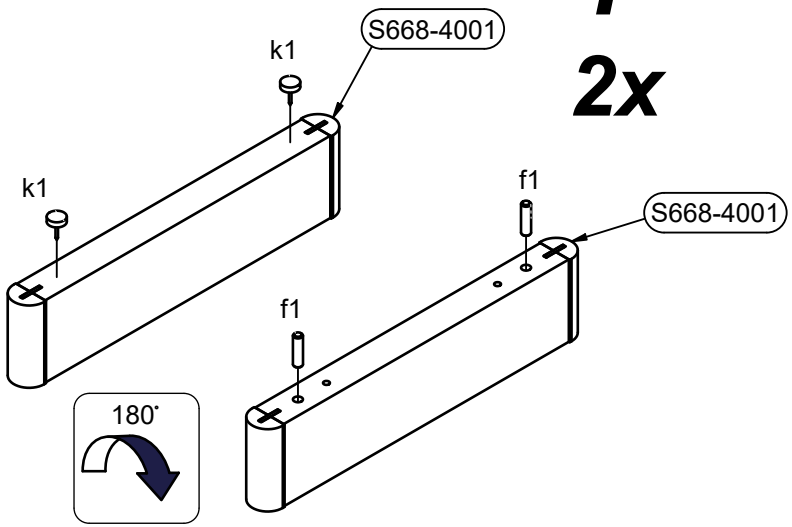
S668-4001
k1
k1
f1
S668-4001
f1
180°

5

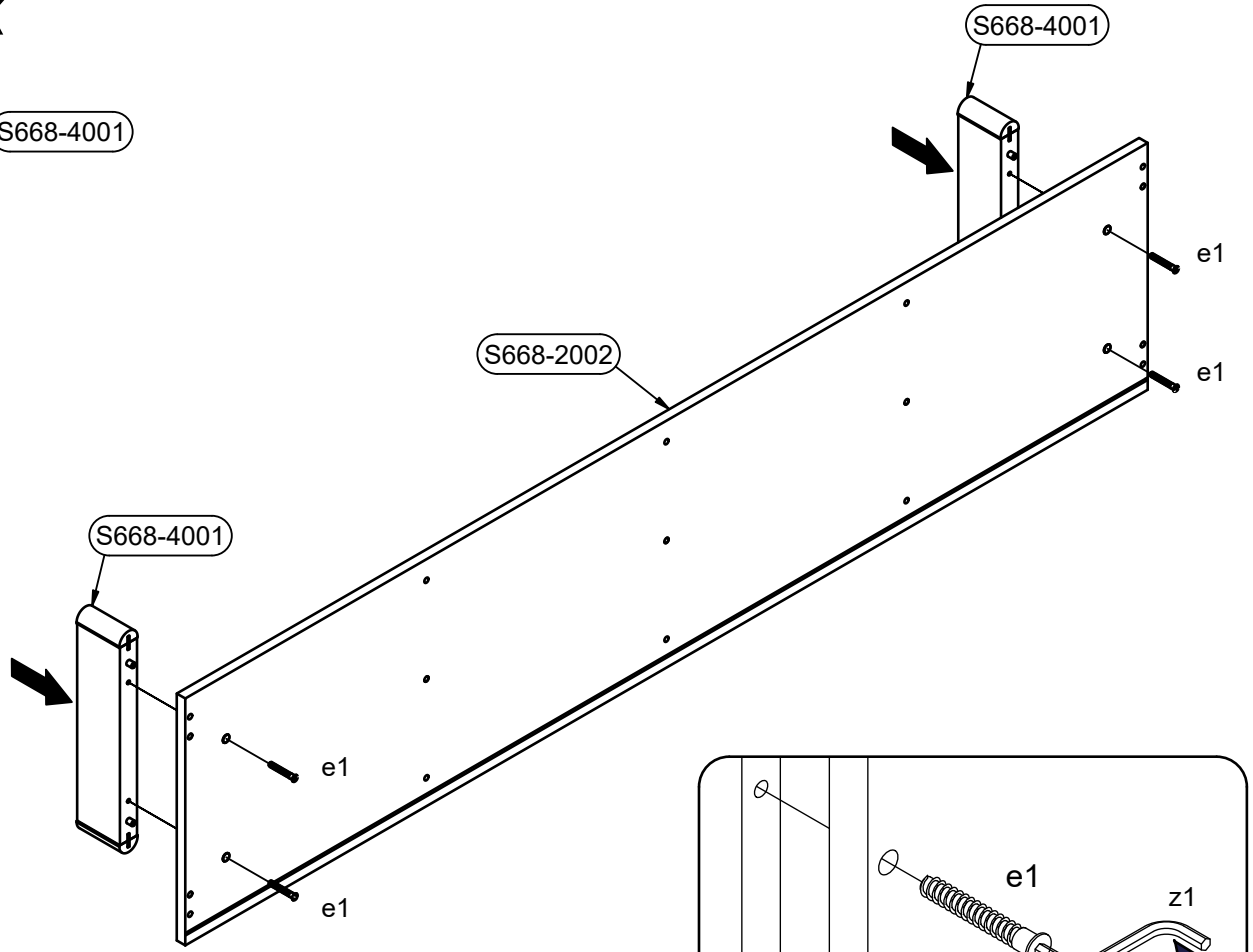
S668-4001
e1
e1
S668-2002
S668-4001
e1
e1

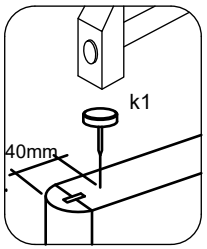
k1
40mm

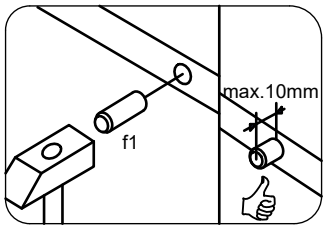
max.10mm
f1

e1
z1

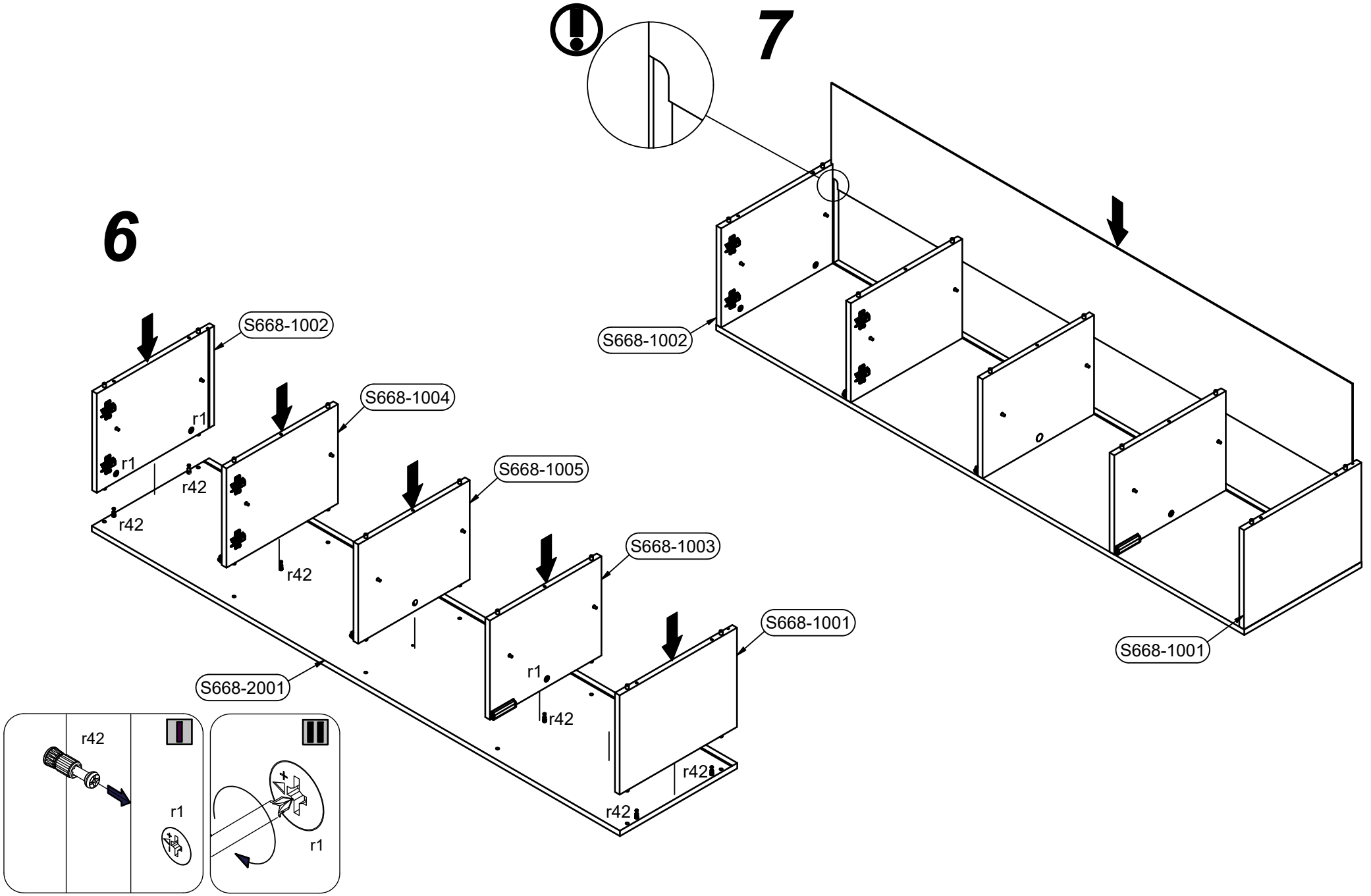
7
6
S668-1002
S668-1004
S668-1005
S668-1003
S668-1001
S668-2001
r1
r42
I
II

e1	7x
50mm	

p51	4x	k38\10	1x	k38\3	1x
3.5x15mm					

8

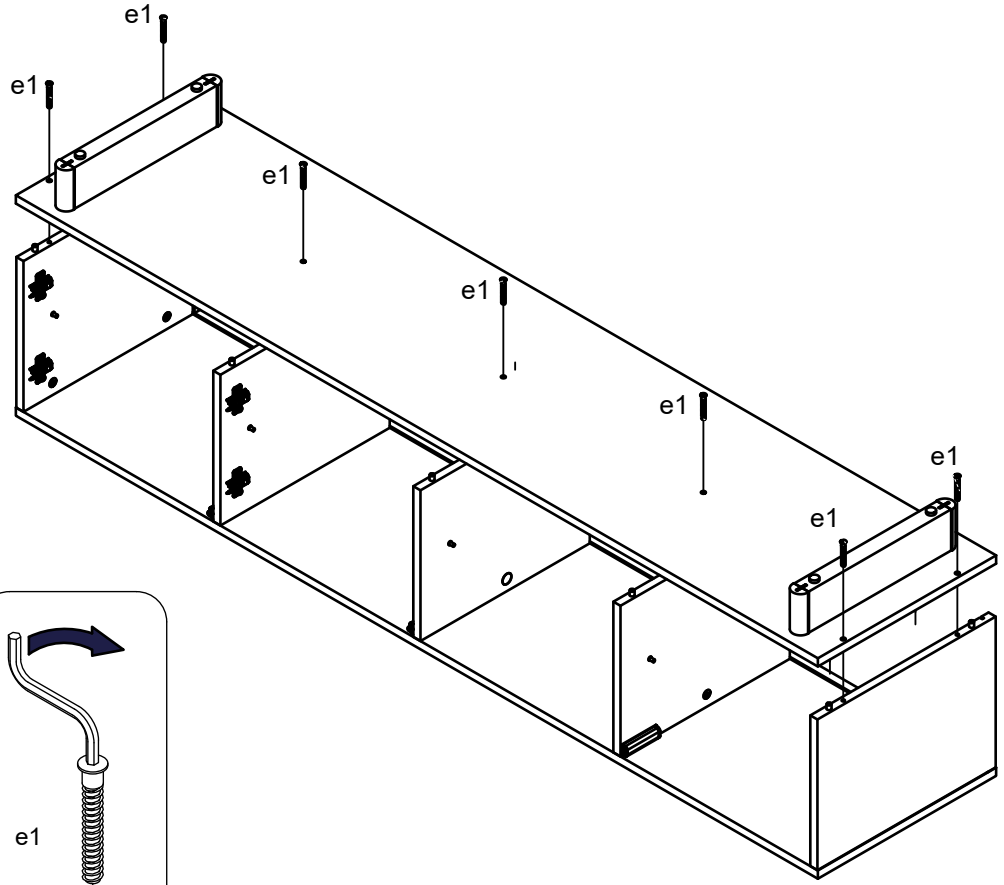

9

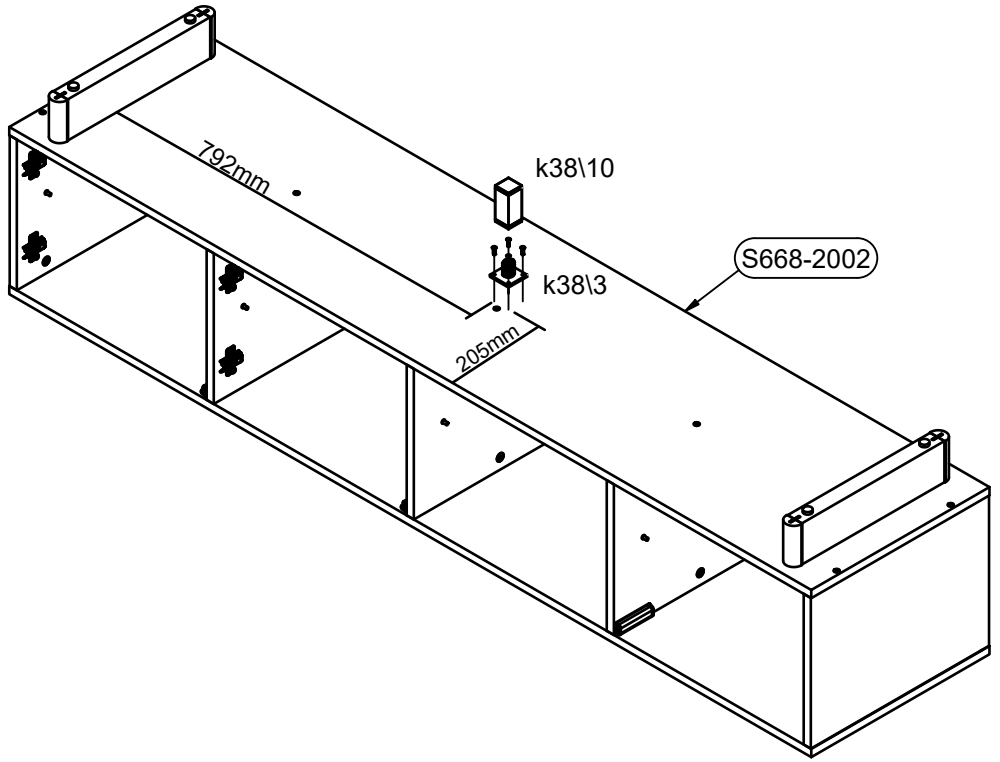

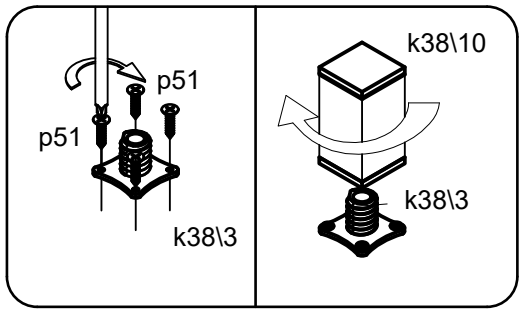

10

l2 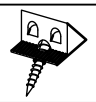	10x	p55  2.8x16mm	6x

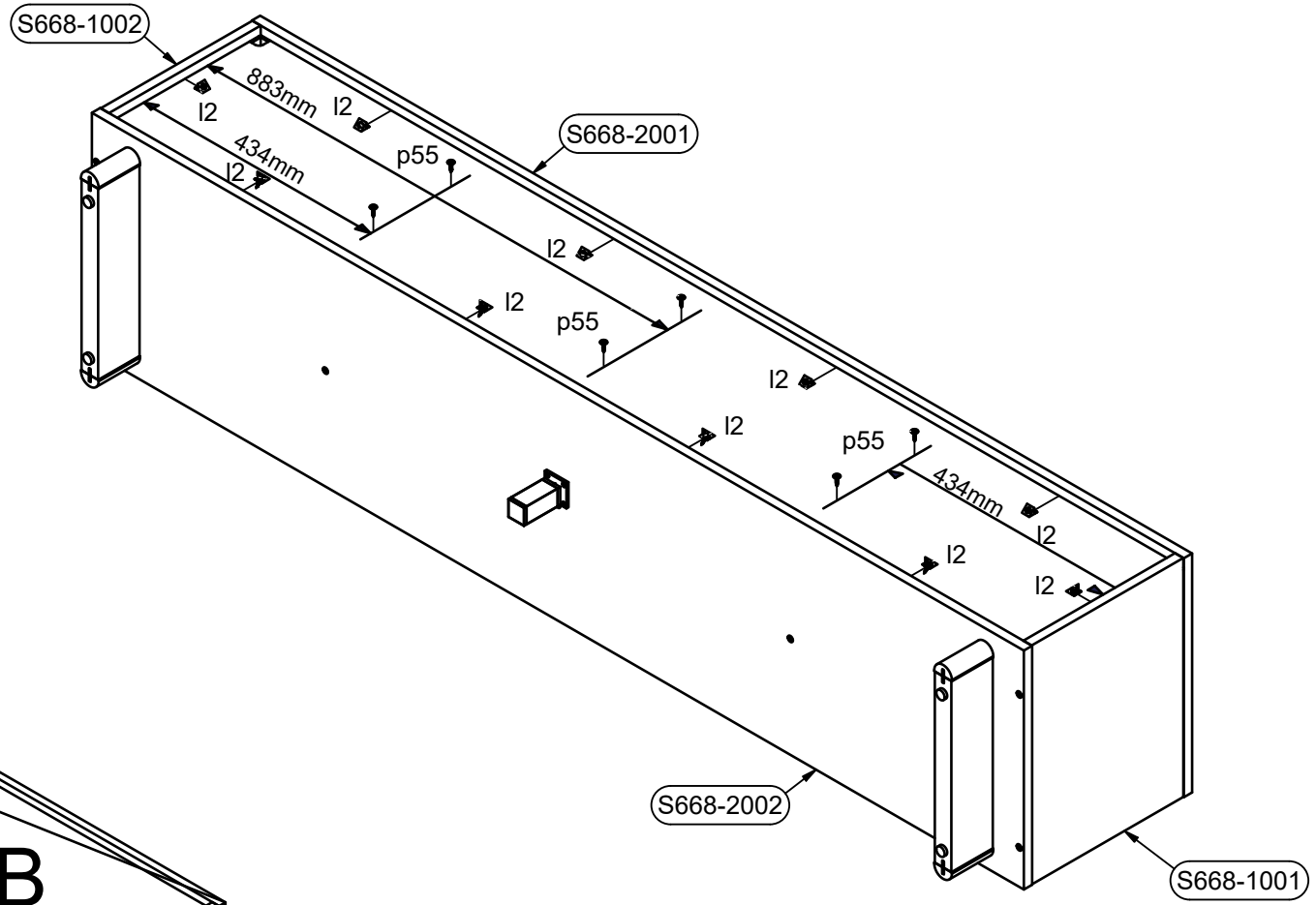

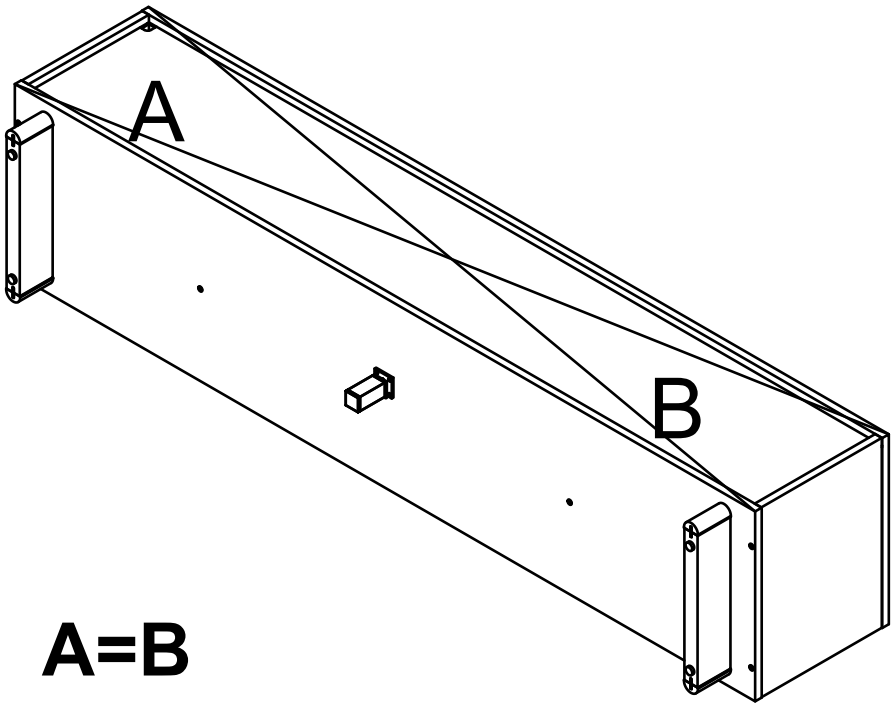

A=B

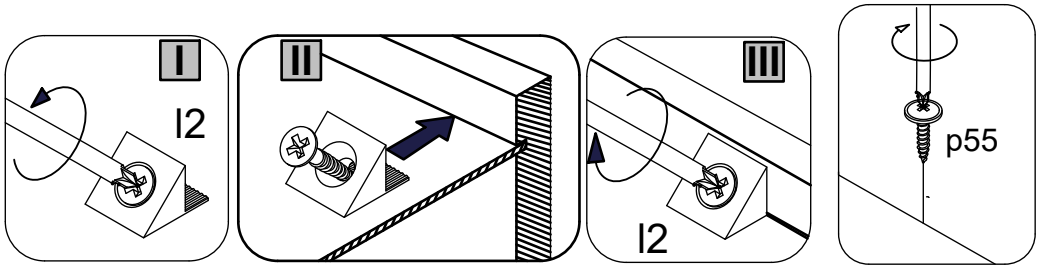

11

a212	1x	a205	1x	a204	2x	a211	2x	p51 3.5x15mm	12x

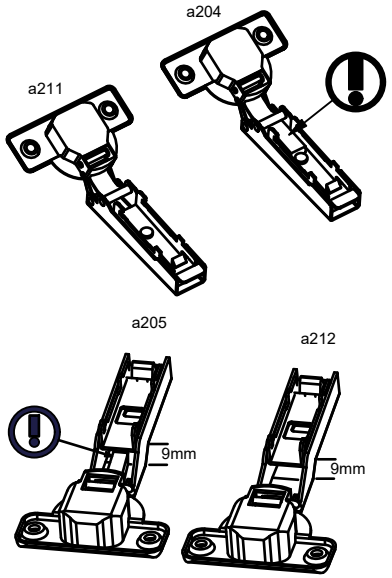

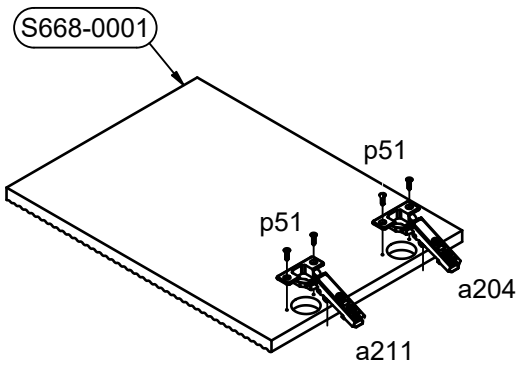

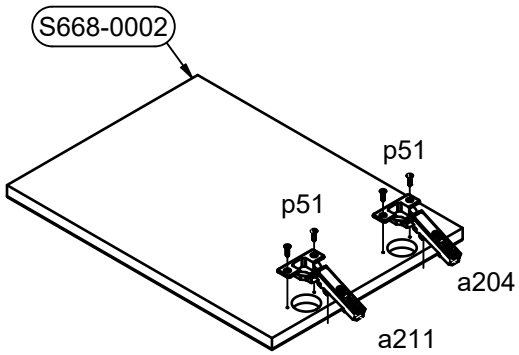

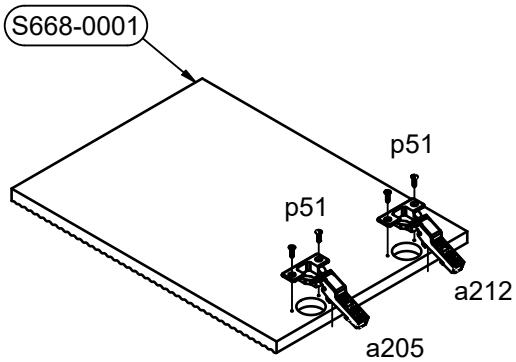

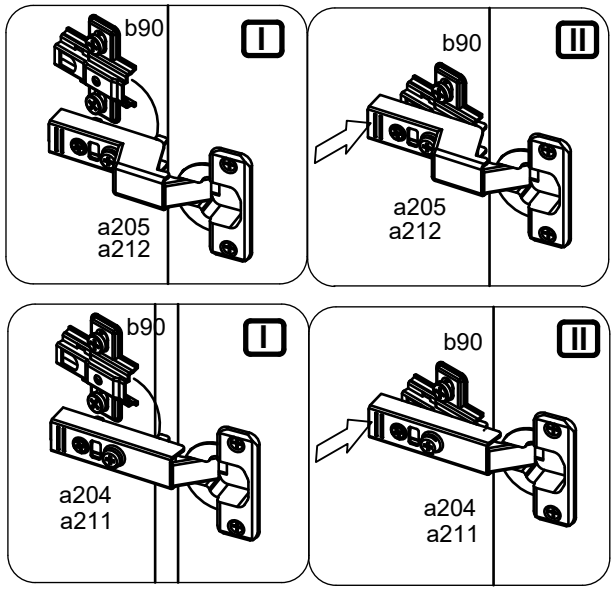

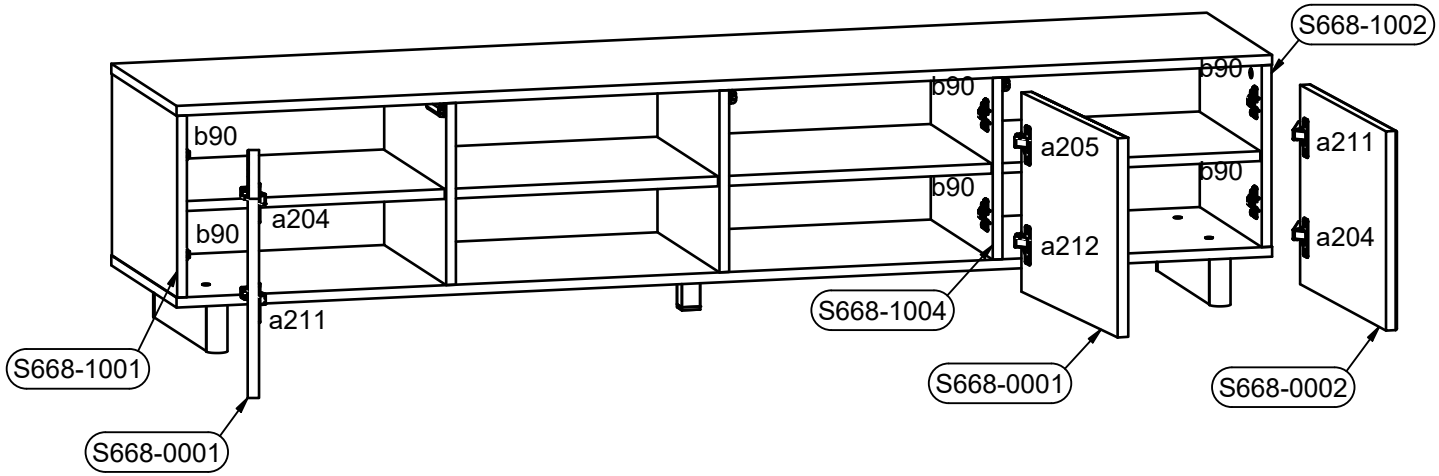

12

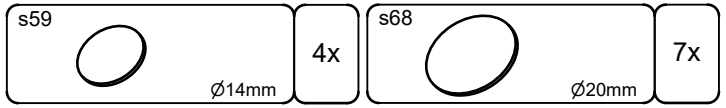
s59
Ø14mm
4x
s68
Ø20mm
7x

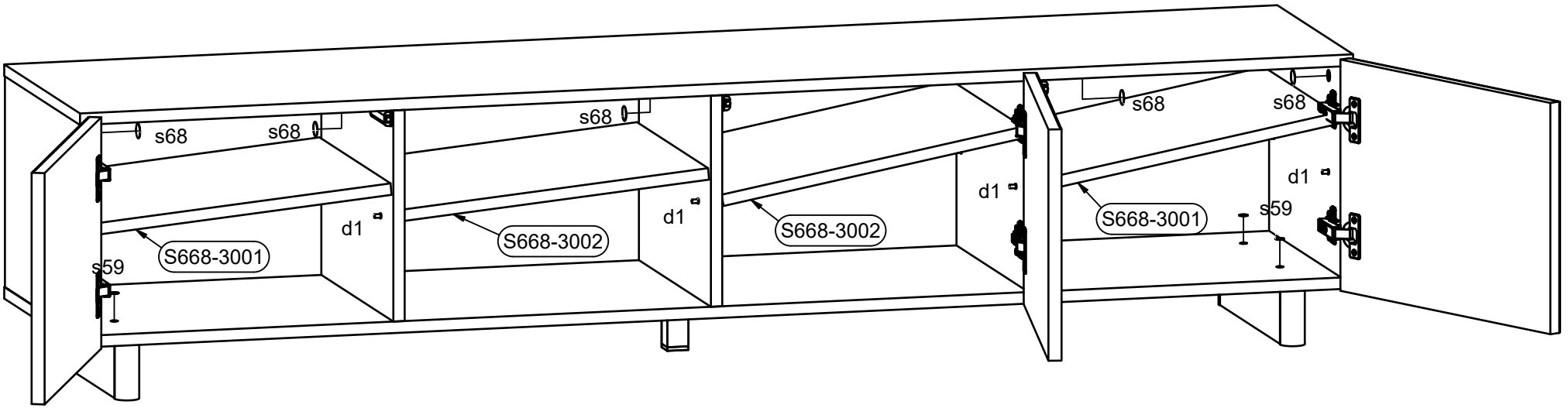
s68
s68
s68
s68
s68
d1
d1
d1
d1
S668-3001
S668-3002
S668-3002
S668-3001
s59
s59

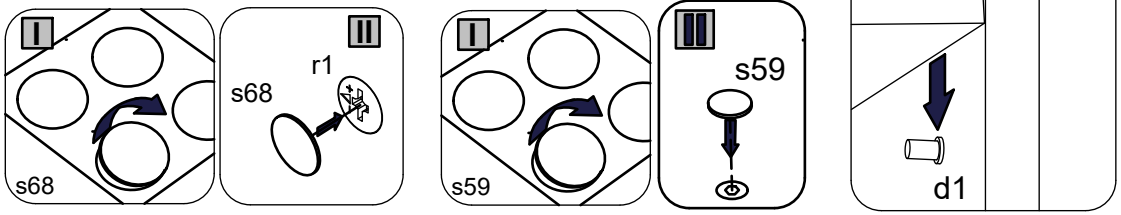
s68
r1
s68
s59
s59
d1

n14\2 	2x
p51 3.5x15mm	4x

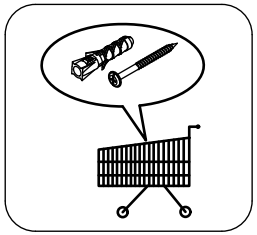

13

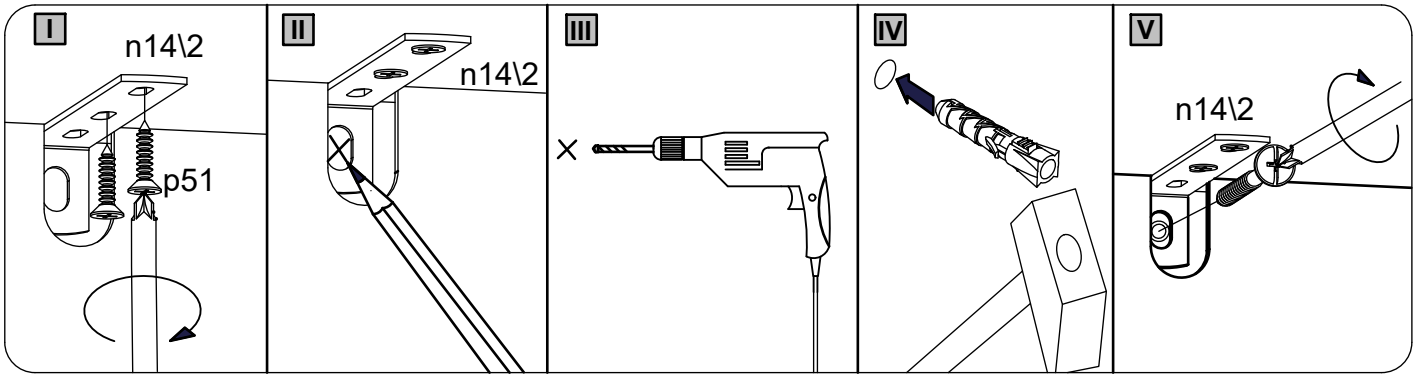

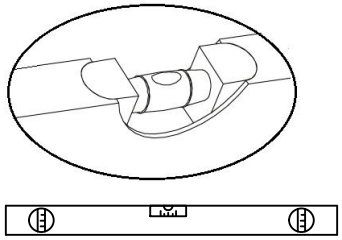

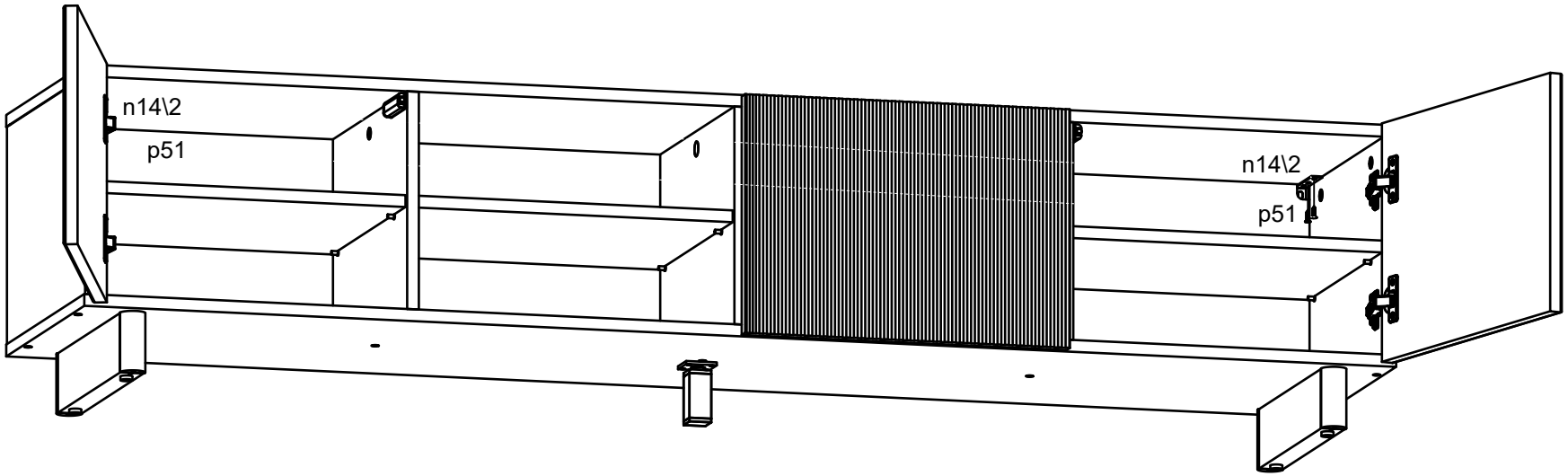

14

